# BRIDGE PACKAGE 15

*Anderson, Chester, Chesterfield, and Lancaster Counties, SC*

Statement of Qualifications | Design-Build Project ID 8862230 | January 31, 2023

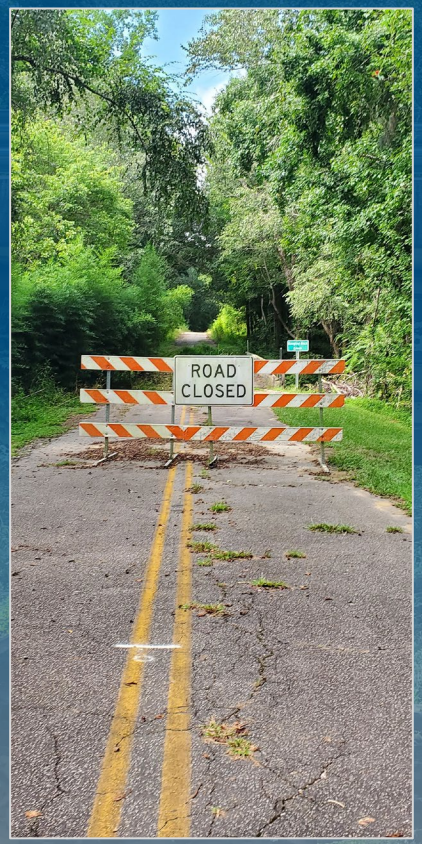

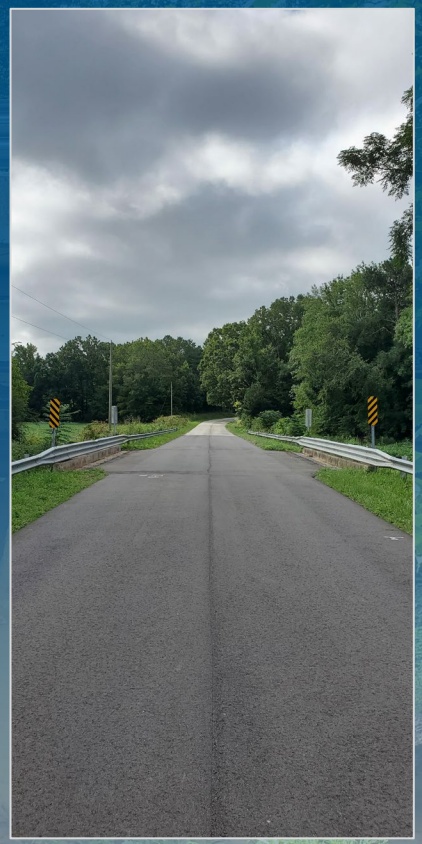

E.S. WAGNER CO.
75 Year Anniversary
1947-2022

SCDOT

HOLT

# This document includes several links for ease of reference.

# Referenced text is noted as "TEXT" with links to various items in the proposal document.

**To return to your PREVIOUS VIEW, click ALT + left arrow.**

**You can also set your PDF viewing preferences by following these steps:**

1) Click View
2) Show/Hide
3) Toolbar Items
4) Show Page Navigation Tools
5) Check "Previous View"

**A button which can be used to go directly to your previous view will appear on your toolbar.**

# Bookmarks are also set on the left side of the PDF document for your convenience.

# 4.1 Technical proposal

## 4.1.1.A – PROJECT DELIVERY and APPROACH

**Project Delivery and Approach | The E.S. Wagner Company, LLC (ESW)-Holt Consulting Team (Holt)** have assembled a highly qualified and integrated Team to deliver this project for SCDOT. Being fully committed and working collaboratively is our Team's approach to completing this project successfully. Our Project and Assistant Project Managers, as well as our Design Manager are all Professional Engineers who provide SCDOT with highly educated and experienced key personnel critical to delivering the project. The project will be managed from ESW's Charlotte office with support from office locations in Piedmont, South Carolina and Hallsboro, North Carolina as necessary. This proximity will place all bridge sites less than 60 miles from an ESW office. Holt will manage the design from their Columbia and Greenville offices to provide immediate access and response to SCDOT. Our Team's office proximity will allow us to integrate seamlessly, communicate, and resolve challenges as a Team and with SCDOT through in-person or virtual meetings at any of our South Carolina offices, SCDOT headquarters, District offices, or at any bridge site with same-day notice, if necessary.

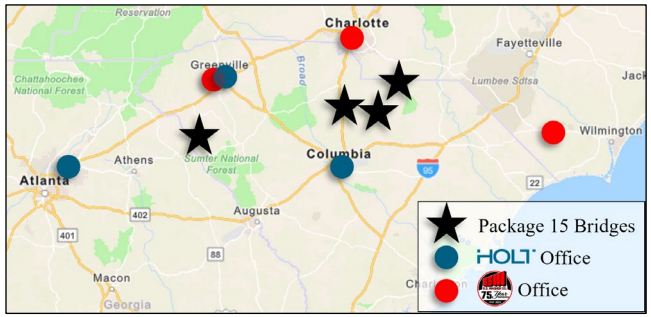


*Figure 1. Location of Resources in Relation to Bridge*

Immediately following Notice of Award, ESW will issue a design Notice to Proceed (NTP) to Holt to begin design and plan development. Plan design and development will be at our own risk and is further evidence of the commitment our Team has to complete the project ahead of schedule. Holt, with input from ESW, will develop the Design Review Submittal Schedule as well as the Design Quality Control (QC) plan which will be submitted to SCDOT for comment and approval prior to NTP from SCDOT. This process will cover Design Submittal sequencing and a detailed CPM schedule for the Project Deliverables per Exhibit 4Z of the RFP document. This will not only include design plan submittals, but also construction submittals such as the Traffic Management, Foundation Installation, and As-Built Plans.

The ESW-Holt Team has been fully engaged since advertisement of the RFQ. We have discussed and agreed upon the design elements that are critical and essential to the success of the project. Our Team has developed a project schedule which includes construction activities and all construction deliverables. The schedule was developed to establish critical path items and minimize project risks which will enable our Team to manage the schedule accordingly throughout the contract. ESW's master project schedule will also include subcontractor schedules which will help minimize project risks. During the Proposal Development phase, we reached out to crucial subcontractors (drilled shaft, paving, and hauling operators) to garner specific input resulting in solid team cohesion. Coordination with these skilled tradesmen has allowed us to nail down our project schedule, including how to expedite the project to achieve project success, if necessary.

The ESW-Holt Team members have never been late on a project deadline or plan submittal which speaks volumes to our Team's past performance and commitment to delivering projects on-time. Our Team is committed to providing design and construction deliverables within the project schedule and we will leverage Holt's previous experience on the Emergency Bridge Packages 2018-2A and 2020-1, which saw a total of five (5) Low Volume (LV) bridges replaced in an expedited schedule, to minimize SCDOT plan review comments. ESW will mobilize the necessary construction equipment and dedicate field personnel as necessary to meet schedule requirements. ESW is prepared to work nights and weekends as well as utilize multiple crews if necessary to meet deadlines. We anticipate there will be multiple crews working concurrently during construction.

**Assurances and Ability to Complete the Project Within the Required Timeframe |** ESW has the financial, equipment, personnel, and technological resources on-hand and available to meet the needs of this project. ESW's backlog is currently $86 million with a total bonding capacity of $500 million. ESW maintains 6 structures crews and 12 grading/drainage crews and associated equipment in the Carolinas, and <u>a minimum of 2 structures crews and 1 grading crew will be committed to this project</u>. ESW will allocate additional resources from other office locations as necessary to ensure any unforeseen schedule impacts are recovered and the project is completed on time to meet SCDOT and public expectations.

In addition to ESW's construction staff and resources, our design team has ample and capable staff to finalize construction plans in a timely and efficient manner. Members of our staff have completed design roles on two (2) prior SCDOT DB projects utilizing LV bridge replacement standards and are immediately available to apply valuable lessons-learned to this project. To expedite the design phase, our Conceptual Plans provided in the Appendices, have been progressed to a final right-of-way (ROW) level. This will enable our Team to submit final construction plans 15 days after the NTP and allow our Team to skip multiple plan submittals and expedite reviews. If necessary, during the design phase, ESW and Holt are prepared to co-locate during critical portions of the project to enhance our Team's collaboration efforts.

Our Project Manager, Assistant Project Manager, Lead Design Engineer, and Construction Manager have been in constant contact and involved throughout the RFP phase. This integral approach has allowed our Team to discuss span configurations, preferred subcontractors, project schedule, constructability, and safety. Our Management, Design, and Construction Team have acted as an integrated entity by communicating with key subcontractors and suppliers to ensure expedited project completion. Upon award, these same key individuals will finalize construction plans and then mobilize to complete the bridge sites. This will allow for an expedient project start-up without introducing new management to the project. By providing this level of integration during the RFP phase, our Team is able to strategically ensure all necessary materials and resources are procured and in place when needed. We plan to start the project as soon as possible and remain on schedule through completion.

As discussed in the previous section, our project schedule located in **Appendix A.3** includes a summary of estimated design and construction timeframes for each project site. This schedule demonstrates our thorough understanding of the design and construction process and illustrates our proposed plan to deliver these bridges efficiently and on time. Holt and our teaming partners have ample staffing resources and will begin design on the first bridge site upon Notice of Award. This will allow the Team an additional month of design time to mobilize for drilling, discuss the project and

anticipated impacts with 3rd party entities (utility companies, landowners, USACE, SCDHEC), acquire new ROW, prepare and submit land disturbance and environmental permits, and perform the necessary plan and design updates to complete the Released For Construction (RFC) plans.

**Managing Schedule Uncertainty |** As we are all aware, supply chain issues still exist due to high demand and lack of availability of necessary items critical for bridge construction. Advance scheduling for concrete, pre-cast bridge elements, and even thermoplastic paint has never been more important. Upon Notice of Award, ESW will reach out to pre-casters and fabricators to obtain Letters of Intent. This letter allows ESW and subcontractors to identify potential supply issues which may arise and mitigate accordingly. We will proactively communicate with all suppliers which in turn will allow us to seek alternatives if necessary. If issues arise during construction that will impact the schedule, our Team will clearly inform the Department so they can make an informed decision on how to address such an issue.

Additionally, our Team is committed to implementing measures of overtime, additional shifts, and move resources to meet scheduled dates and avoid delays. ESW has a strong pool of seasoned and highly experienced crews who have completed multiple bridge projects in South Carolina, ensuring no learning curve will be necessary if a new crew is pulled in to help. ESW has a local equipment staging yard in Piedmont which will be utilized for the S-294 bridge site. This location will provide support for the remaining three (3) bridge sites while resources are mobilized from their Charlotte and Hallsboro locations. We will accomplish our goals through transparency, communication, proven techniques, and available technology with an unwavering focus on safety, environment, quality, cost, and time.

## 4.1.1.B – PROJECT DESIGN APPROACH and MINIMIZATION OF NEW RIGHT-OF-WAY

Our Teams approach to minimizing the acquisition of new ROW centers on utilizing the Low Volume Design Criteria for S-108, S-294, and S-765. This allows our Team to match and maintain the existing vertical (within 15mph of appropriate design speed) and horizontal geometry throughout the project corridor. S-53 is required to meet standard SCDOT criteria, however, allowing the design Team to maintain the existing horizontal alignment

and utilize a close and detour approach which is critical to eliminating the need to acquire unnecessary ROW for off-alignment construction. Due to the above-mentioned design guidelines, our Team has been able to upgrade all existing vertical curve K-Values within the project corridors, in turn making each road safer to the traveling public. Bridge layouts have also been developed to span channels, which will eliminate debris buildup, and span configurations have been developed which minimize the number of spans.

New ROW follows the guidelines in the RFP which dictates acquiring 75 ft of ROW on each side of centerline of the existing roadway for a length of 75 ft from each end of the bridge (following the SCDOT Roadway Design Manual Chapter 12) except per sites with at least 45 ft from each new bridge end. Our Team has minimized bridge and roadway lengths where possible creating a reduction in the amount of new ROW. Also, where practical, our Team proposes to utilize guardrail and 2:1 slopes to maintain existing ditches and ROW to the greatest extent possible (see roadway plans for all sites). On the S-53 bridge site, there is an area where compressed shoulder guardrail could be utilized to minimize new ROW. However, our Team has not yet incorporated this into our plans. After award, this will be discussed in further detail with SCDOT.

Further proof of the ESW-Holt Team's effort to minimize new ROW acquisition efforts are shown in Table 3 (and located **HERE)** which shows our Teams' design impacts versus the conceptual plans. Finally, upon notification of award, the Design Team will review the locations of NPDES lines to determine if permission forms can be signed for erosion control permission in-lieu of acquiring new ROW. If a property owner will sign a permission for erosion control this would allow the design team to further reduce the amount of new ROW required.

## 4.1.1.C – PROJECT SCHEDULE and DESIGN SUBMITTAL PROCESS

Our proposed submittal packages are shown in Tables 1 and 2 on the following pages and are explained in more detail in Appendix A.3. Each submittal package will be compiled to contain all requirements as set forth in Exhibit 4Z of the RFP. All plan (road and bridge) submittals will undergo a rigorous QC, by a 3rd party firm (WSP) who will provide a fresh set of eyes on the project due to not being actively involved in the design effort.

Finally, all design efforts will be completed within 9 months from Notice-to-Proceed. This will provide additional time for completion of environmental/land disturbance permits and ROW acquisition while allowing seamless transition from one construction site to another without delays. Our Team will continuously monitor the design submittal process utilizing BlueBeam which our Team has utilized on previous projects.

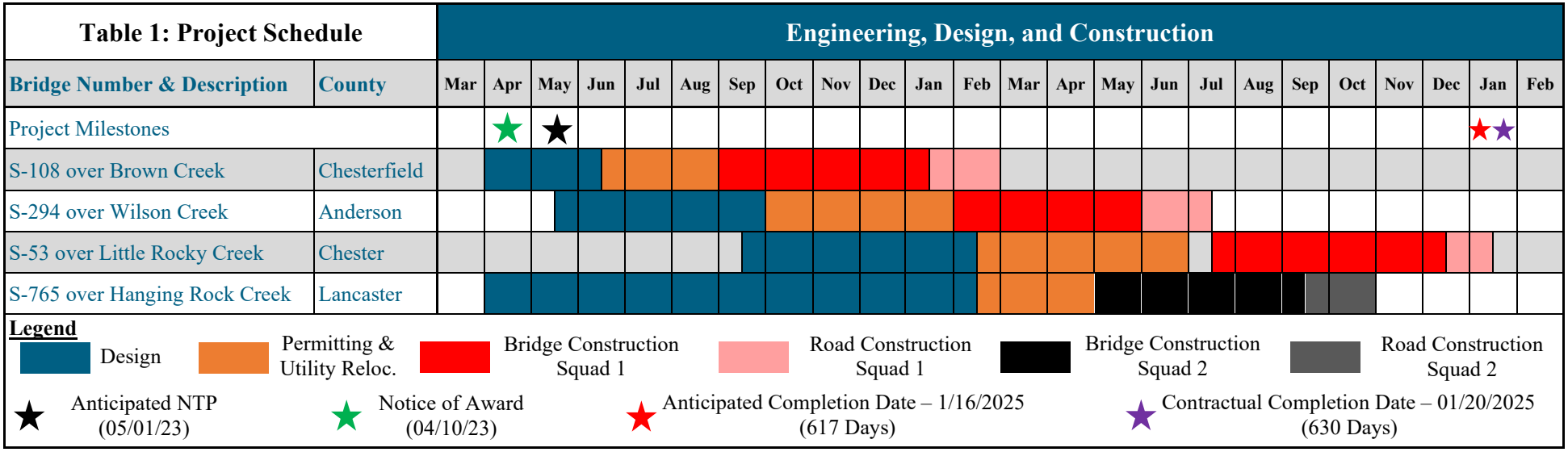


The Design Team has currently progressed the design to approximately a 70% design. Upon Notice of Award the Design Team, led by Holt, will progress the design for each site to a final construction level (excluding S-765 over Hanging Rock Creek which begins at Preliminary Plans due to the desire to discuss 2-dimension modeling with SCDOT) and submit to SCDOT for review. Preparing three of the four bridge sites to a 90-95% level will allow our Team to save significant contract time and create additional time for public involvement, ROW, permitting, and utility coordination efforts. This was the same approach Holt utilized and completed for two (2) successful Emergency Design Build Projects which resulted in three (3) and two (2) bridges being designed and constructed within 200 and 215 days, respectively. Our goal is to have minimal comments on the plan submittals to help expedite the schedule.

Holt will develop and provide a Design QC plan and outlining lines of communication and design deliverable schedules. The QC plan along with the public involvement plan will be submitted to SCDOT at the Preconstruction Meeting. Traffic Management Plans and Traffic Control Sheets will be submitted with each bridge submittal. Our Team will start work once Notice of Award is issued and will be ready to submit final plans of S-108 for review approximately 10-15 days after NTP. The S-108 site since it is the site with the least amount of risk. The site has limited to no utility relocations, is a single span bridge structure, and has no environmental permits required. The other bridge sites are slightly more complex and will require additional time and effort to complete.

| Table 2: Project Deliverable Sequence | | Engineering and Design Submittal Process | | | | | | | | | |
|---|---|---|---|---|---|---|---|---|---|---|---|
| Bridge Number & Description | County | 1 | 2 | 3 | 4 | 5 | 6 | 7 | 8 | 9 | 10 |
| S-108 over Brown Creek | Chesterfield | FN | RFC | | | | | | | | |
| S-294 over Wilson Creek | Anderson | | | FN | RFC | | | | | | |
| S-53 over Little Rocky Creek | Chester | | | | | | | FN | RFC | | |
| S-765 over Hanging Rock Creek | Lancaster | | | | | PR | RW | | | FN | RFC |

PS – Preliminary Submittal (S-765 only Road and Bridge)
RW – ROW Submittal (S-765 only Road)
FN – Final Plan Submittal (Road and Bridge)
RFC – Released for Construction Submittal (Road and Bridge)

We will coordinate our design submittals based on Table 2 above, the CPM Schedule **HERE**, and through coordination with ESW. We have focused on sites with minimal ROW required for construction, minor utility relocations, and minimal wetland permitting requirements. Submitting the simplest bridges first will allow ESW to begin construction immediately and allow the design team more time to progress through the other more difficult bridge sites. Our design submittal schedule allows ESW to mobilize and begin construction approximately 4 months after NTP.

## 4.1.2 – INNOVATION and ADDED VALUE

The ESW-Holt Team recognizes these bridges replacements are not too complex and, therefore, do not present many opportunities to provide innovation. We feel confident we have provided the SCDOT with a product that will meet or exceed all of SCDOT's goals and requirements stated in the RFP which are removing schedule uncertainty, removing cost uncertainty, minimizing environmental impacts, and no change orders. However, we

have incorporated several ideas noted in the tables below which provide SCDOT innovation and added value which should be taken under further consideration:

| Table 3: Innovation and Added Value | |
|---|---|
| **Ability to Meet Project Schedule Goals and Including Milestone Schedule Dates** | |
| **1.** ESW has had **ZERO** final completion liquidated damage claims and has never been late on a project deadline. This is due to scheduling prioritization, construction staff knowledge, and the ability to mobilize additional resources as necessary. | ESW takes pride in the fact they can claim they have completed all their projects on-time and have never been assessed a penalty for finishing a project late. ESW relies on their staff (project managers and senior construction individuals) to steer each of their projects towards success. They plan individual crew activity and experience while also utilizing scheduling software such as Microsoft Project and Primavera to allocate resources as necessary. |
| **2.** Holt has **NEVER** been late on a project design submittal deadline. | Like ESW, Holt also takes pride in never being late for a plan deadline submittal. In the 10 years Holt has been performing design services, they have never been late and have incorporated the "whatever it takes" mentality to ensure projects deadlines are not only met, but also ensure the quality of our products are not sacrificed. As such Holt averages over a 7/10 on Consultant Performance Evaluation Scores for their Bid-Build procurement projects for SCDOT, and recently received a 10/10 for a GDOT bridge bundle package. |
| **3.** ESW has reached out to various specialty subcontractors during the procurement and design phase to engage them early and receive feedback on the Team's proposed design and layouts. | ESW acknowledges their need to subcontract specific services instead of attempting to complete themselves. To this effect, ESW has engaged key subconsultants such as Lee and Sims, who will likely perform the Teams' drilled shafts for each bridge site and is a leader in drilled shafts in South Carolina, early to discuss schedule implications and how the Team can deliver the project successfully. This integrated approach allows our Team to utilize our relationships, past performance, and experience to successfully complete the project. |
| **4.** Our Team has created a design submittal schedule utilizing Microsoft Project (similar to Primavera) to minimize uncertainty and risks in the project schedule | Hydraulic design and modeling will be a critical aspect of these bridge designs which is why our Team has already begun to progress models to preliminary construction plan level. As such, our Team is organized such that two independent designs are being progressed simultaneously (S-108 and S-765), which will help accelerate the overall schedule. Additionally, WSP will provide a "third-party" quality control review for all sites (road, bridge, and hydro) prior to all submittals to SCDOT with the goal of reducing comments and therefore reducing time between submittals and RFC. |
| **5.** Mitigate supply chain delays and disruptions by contracting early with fabricators | Procuring key items, such as cored slabs and box beams will be critical for the bridge replacement project. The ESW-Holt Team has already reached out to our industry partners to procure key items for completion of the project. We are utilizing our long-standing relationships with key material vendors, subcontractors, pre-casters, and fabricators, to obtain early Letters of Intent to lock in critical dates early in the project. |
| **6.** Mitigate for market conditions and labor shortages. | ESW has staff that is highly capable, well-trained, and motivated with over 150 full-time employees and approximately 200 seasonal employees. Over 40% of the company's key staff have over fifteen (15) years of tenure with ESW, and senior managers average thirty-five (35) years of industry experience, which is a testament to ESW's success and their business model. |

## Minimize Impacts to SCDOT Right-of-Way Acquisition Costs

1. The ESW-Holt Team have been constantly discussing their design and construction methods throughout the design phase. Proposed profiles have been tightened, while still meeting all requirements of the RFP, roadway foreslopes steepened while still meeting roadside safety standards, and the bridge on S-765 over Hanging Rock Creek was reduced by use of an ATC. All the above-mentioned items have resulted in reductions in the amount of new ROW required from the provided Conceptual Plans as shown below.

| Bridge Number & Description | | RIGHT-OF-WAY IMPACTS | | |
|---|---|---|---|---|
| | | Conceptual Design | ESW-Holt Team Design | Difference |
| S-108 over Brown Creek | Chesterfield | 23,844.095 SF<br>0.547 AC | 13,172.690 SF<br>0.302 AC | **(-) 10,671.405 SF<br>0.245 AC** |
| S-294 over Wilson Creek | Anderson | 88,616.342 SF<br>2.034 AC | 62,153.052 SF<br>1.427 AC | **(-) 26,460.29 SF<br>0.607 AC** |
| S-53 over Little Rocky Creek | Chester | 83,683.915 SF<br>1.921 AC | 60,413.8903 SF<br>1.387 AC | **(-) 23,270.025<br>0.53 AC** |
| S-765 over Hanging Rock Creek | Lancaster | 22,872.398 SF<br>0.525 AC | 20,790.000 SF<br>0.477 AC | **(-) 2082.398 SF<br>0.047 AC** |

| | |
|---|---|
| 2. Once the NTP has been awarded, at the kick-off meeting we will discuss each bridge site with SCDOT. | Holt utilized this method on the 2018-2A and the 2020-1 Emergency Bridge Projects to great benefit and proposes to utilize this approach again. At the kickoff, we will discuss issues SCDOT may have found in the preliminary plans submitted in the proposal allowing the design Team to adjust plans and design accordingly to save time. |
| 3. Clearing of the site by ESW as needed to aid in early utility coordination efforts. | ESW commits to clearing areas within the new ROW as needed to accommodate the relocation of existing utilities. |

## Avoid or Minimize Impacts to Utilities

| | |
|---|---|
| 1. Deenergize or Shield Power Lines on S-108. | Our Team is evaluating the clearance to the power lines to determine if there is a conflict on S-108. We have discussed options with Lynches River and determined the line can be dropped or shielded during construction since it is not active. |
| 2. Creation of a utility relocation plan that works in conjunction with construction activities. | The ESW-Holt Team has developed a design schedule that works in conjunction with our construction schedule. Our Team's schedule was developed to minimize construction delays by beginning construction on the least invasive utility relocation bridge sites. This allows our Team to continue discussion, determine utility impacts on the projects we have identified to be most utility relocation prone, and determine ways to minimize impacts/relocations. |
| 3. No-Conflicts for S-294. | From the provided utility information and coordination, we have determined that the current West Carolina Telephone lines attached to S-294 are abandoned cables and will have no associated impacts to construction activities. This will expedite the construction of this bridge site but will be further verified upon NTP. |
| 4. The S-53 bridge has been scheduled later for construction to allow time for power to be restored to the active line. | S-53 has been scheduled later to allow Fairfield Electric time to replace their existing out of service line on SC 901 (Mountain Gap Road) due to SCDOT's current bridge replacement project over Rocky Creek. Once the SC 901 line is connected, the line over S-53 will be dead ended on either side of the bridge. Dead ending the existing line instead of temporarily or permanently relocating the line is added value due to prior rights by Fairfield Electric. |

| | |
|---|---|
| **5.** Coordination with Chester Natural Gas on depths of their existing lines along S-53 | The gas line will need to be potholed to determine the depth from the bottom of the new guardrail posts to the top of the gas line. If there is a lack of vertical clearance, these lines will need to be relocated to a spot outside of the footprint. As mentioned earlier, the S-53 site was pushed towards the later part of the schedule to allow for additional coordination and relocation of utilities if necessary. |
| **6.** Encourage telecommunication companies to utilize conduits in the bridge railings for their facilities. | All bridges are designed to accommodate 4-2" conduits. As such our utility coordination efforts on S-294, S-53, and S-108 will focus on discussing the potential of the telecom owners to place their relocated lines in said conduits in lieu of overhead or at other locations within the corridor. |

## Innovation and Value Added to Project

| | |
|---|---|
| **1.** Use of an additional crossline pipe on S-765 to assist with the flows and backwater issues while also reducing the bridge length (ATC#2). | The design team has added an additional crossline pipe to S-765 per ATC#2, adding capacity to the project and potentially alleviating the overtopping of S-765 at the existing crossline located to the north. |
| **2.** Use of drilled shafts at all interior bent locations. | ESW has chosen to avoid drilled piles or pre-drilling and instead utilize drilled shafts at all interior bent locations. Drilled shafts are a more conservative approach and can accommodate large axial, lateral, and overturning forces. They are also relative unaffected by scour depth requirements making them well-suited for the upstate environment. |
| **3.** Early and ongoing coordination/interaction with SCDOT to discuss impacts associated with the S-765 bridge replacement over Hanging Rock Creek. | Due to risks associated with the hydraulic modeling on the S-765 project, we will involve SCDOT early in the design process to review and develop different scenarios for the bridge downstream. Involving SCDOT early will allow questions to be resolved and enable an integrated design approach between the SCDOT, contractor, and engineer. Due to the additional coordination, the S-765 project is the only bridge site we propose to begin at preliminary plans instead of final construction. |

**4.** As discussed in the minimization of Right-of-Way section on the previous page, our Team has developed our design to minimize impacts to the surrounding corridor by various means and methods. The minimization of these impacts has a direct correlation on environmental impacts as shown in the below columns.

| Bridge Number & Description | | ENVIRONMENTAL IMPACTS | | | | | | | | |
|---|---|---|---|---|---|---|---|---|---|---|
| | | Conceptual Design | | | ESW-Holt Team Design | | | Difference | | |
| | | Stream (LF) | Wetland (ac.) Temp. | Wetland (ac.) Perm. | Stream (LF) | Wetland (ac.) Temp. | Wetland (ac.) Perm. | Stream (LF) | Wetland (ac.) Temp. | Wetland (ac.) Perm. |
| S-108 over Brown Creek | Chesterfield | - | - | - | - | - | - | - | - | - |
| S-294 over Wilson Creek | Anderson | 123.24 | - | - | 52.2 | - | - | **(-) 71.04** | - | - |
| S-53 over Little Rocky Creek | Chester | 46.97 | 0.03 | 0.01 | 43.97 | 0.04 | 0.02 | **(-) 3.0** | **(+) 0.01** | **(+) 0.01** |
| S-765 over Hanging Rock Creek | Lancaster | 22.1 | 0.06 | 0.08 | 69.31 | 0.10 | 0.09 | **(-) 22.1** | **(+) 0.04** | **(+) 0.01** |

# APPENDIX A

## CONCEPTUAL PLANS

# APPENDIX A.1

## CONCEPTUAL ROADWAY PLANS

| FED. RD. DIV. NO. | STATE | COUNTY | PROJECT ID | ROUTE NO. | SHEET NO. |
|---|---|---|---|---|---|
| 3 | SC | CHESTER | 8862230 | S-53 | 3 |

SCDOT
South Carolina Department of Transportation

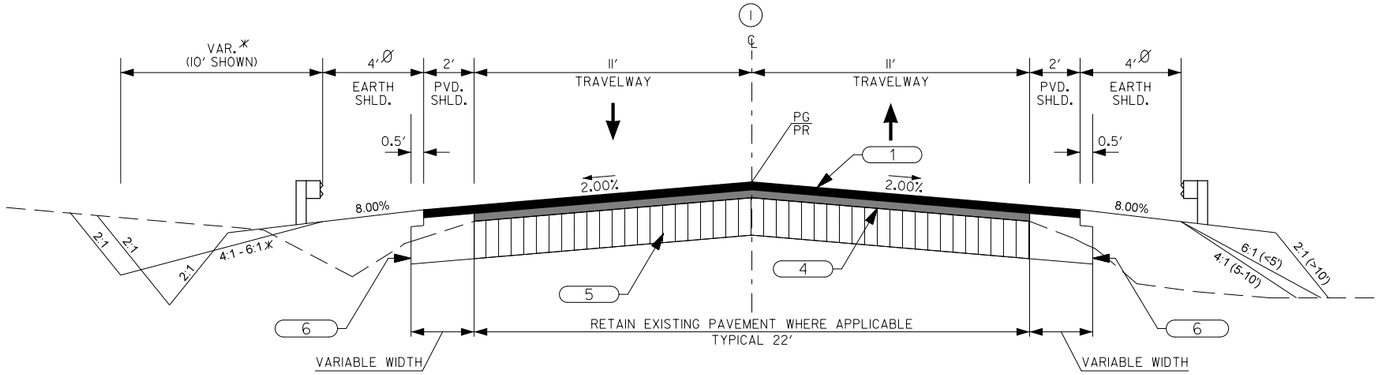


**USE THIS SECTION ON S-53 (ROSS DYE ROAD) OVER LITTLE ROCKY CREEK**
**STA. 27+00.00 TO APPROX. STA. 27+90**
**APPROX. STA. 37+20 TO STA. 38+90.00**

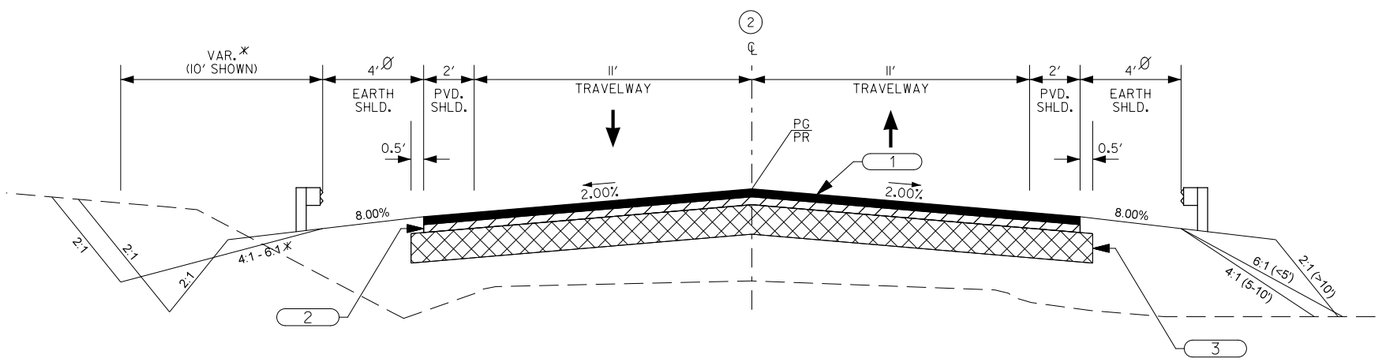


**USE THIS SECTION ON S-53 (ROSS DYE ROAD) OVER LITTLE ROCKY CREEK**
**APPROX. STA. 27+90 TO APPROX. STA. 37+20**

**EXCEPTION: 345' x 36' BRIDGE**
**FROM STA. 30+25.00 TO STA. 33+70.00**

NOTES:

✳ VARIABLE - THIS SLOPE MAY BE VARIED WHEN A DEEPER DITCH IS NECESSARY FOR DRAINAGE PURPOSES, USING A MINIMUM SLOPE OF 12:1 AND A MAXIMUM SLOPE OF 4:1. WHERE A DEEPER DITCH THAN PROVIDED BY A 4:1 IS NECESSARY, THE DITCH SHALL BE PLACED FARTHER FROM THE C/L CONTINUING THE 4:1 SLOPE TO PROVIDE FOR THE NECESSARY DEPTH.
SEE PROFILE FOR SPECIAL DITCH GRADES.

Ø WHERE CLEARZONE IS UNATTAINABLE OR END TREATMENT IS REQUIRED FOR BRIDGE APPROACH, ADD 3.75' TO SHOULDER FOR GUARDRAIL AND 2:1 FORESLOPE. ADDITIONAL SHOULDER WIDTH REQUIRED FOR END TREATMENT TYPE "TL3".
SEE SCDOT STANDARD DRAWING 805-115-10.

PLACE MILLED IN RUMBLE STRIPES IN ACCORDANCE WITH SCDOT STANDARD DRAWING 633-105-00.

TRANSITION PAVED SHOULDER
LT STA. 29+52.00 TO 29+68.00
LT STA. 34+27.00 TO 34+43.04
RT STA. 29+52.00 TO 29+68.00
RT STA. 34+27.00 TO 34+42.97
SEE PLANS AND CROSS SECTIONS FOR DETAILS.

## LEGEND
## (PAVEMENT DESIGN)

| | |
|---|---|
| 1 | HOT MIX ASPHALT SURFACE COURSE TYPE C (175 LBS/SY) |
| 2 | HOT MIX ASPHALT SURFACE COURSE TYPE C (175 LBS/SY) |
| 3 | HOT MIX ASPHALT BASE COURSE TYPE A (700 LBS/SY) |
| 4 | VARIABLE DEPTH HOT MIX ASPHALT SURFACE COURSE TYPE E < 1.5"<br>VARIABLE DEPTH HOT MIX ASPHALT INTERMEDIATE COURSE TYPE C > 1.5" |
| 5 | RETAIN EXISTING PAVEMENT |
| 6 | SHOULDER WIDENING MATERIAL (400 LBS/SY) |

FUNCTIONAL CLASS

RURAL MAJOR COLLECTOR

| | DESIGN SPEED | | |
|---|---|---|---|
| ROUTE | MPH | FROM STA. | TO STA. |
| S-53 | 45 | 26+65.00 | 39+00.00 |
| | | | |
| | | | |
| | EXCEPTIONS TO DESIGN SPEED | | |
| | | | |
| | | | |
| | | | |

PAVEMENT DESIGN

APPROVED BY

DATE

E.S. WAGNER CO. 75 Year Anniversary 1947-2022

HOLT CONSULTING COMPANY, LLC.

| REV. NO. | BY | DATE | DESCRIPTION OF REVISION |
|---|---|---|---|
| 4 | | | |
| 3 | | | |
| 2 | | | |
| 1 | | | |

DESIGNED BY: _____ DATE _____
DRAWN BY: _____ DATE _____
CHECKED BY: _____ DATE _____

SOUTH CAROLINA
DEPARTMENT OF TRANSPORTATION

TYPICAL SECTION
S-53 (ROSS DYE ROAD)
OVER LITTLE ROCKY CREEK

SHEET 3 | SCALE: N.T.S.

| FED. RD. DIV. NO. | STATE | COUNTY | PROJECT ID | ROUTE NO. | SHEET NO. |
|---|---|---|---|---|---|
| 3 | SC | CHESTER | 8862230 | S-53 | 6 |

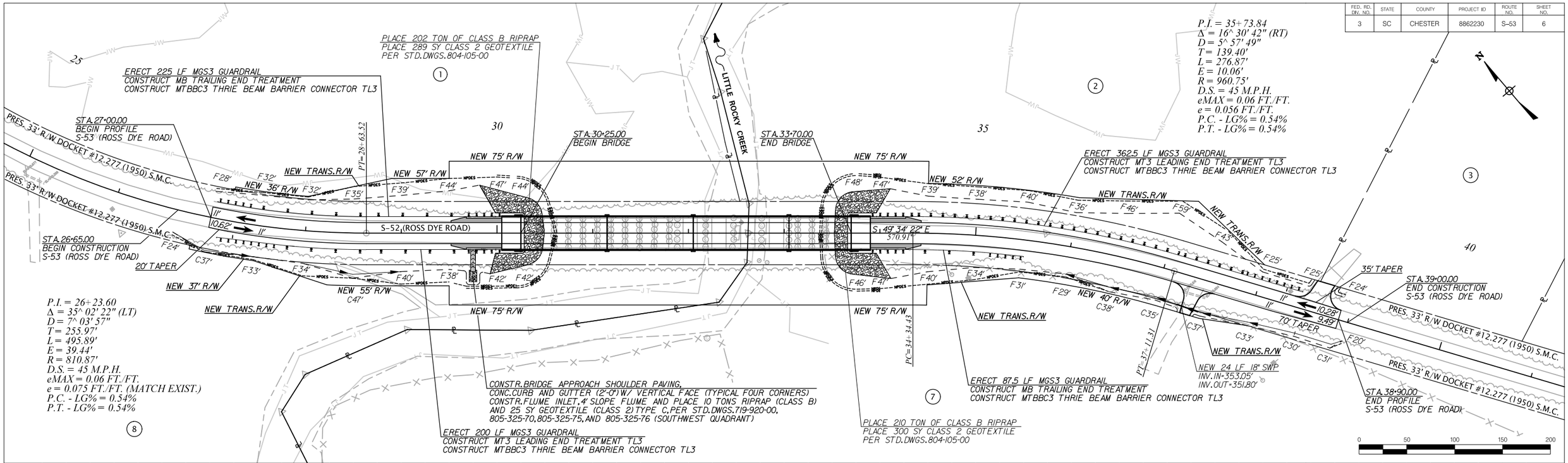


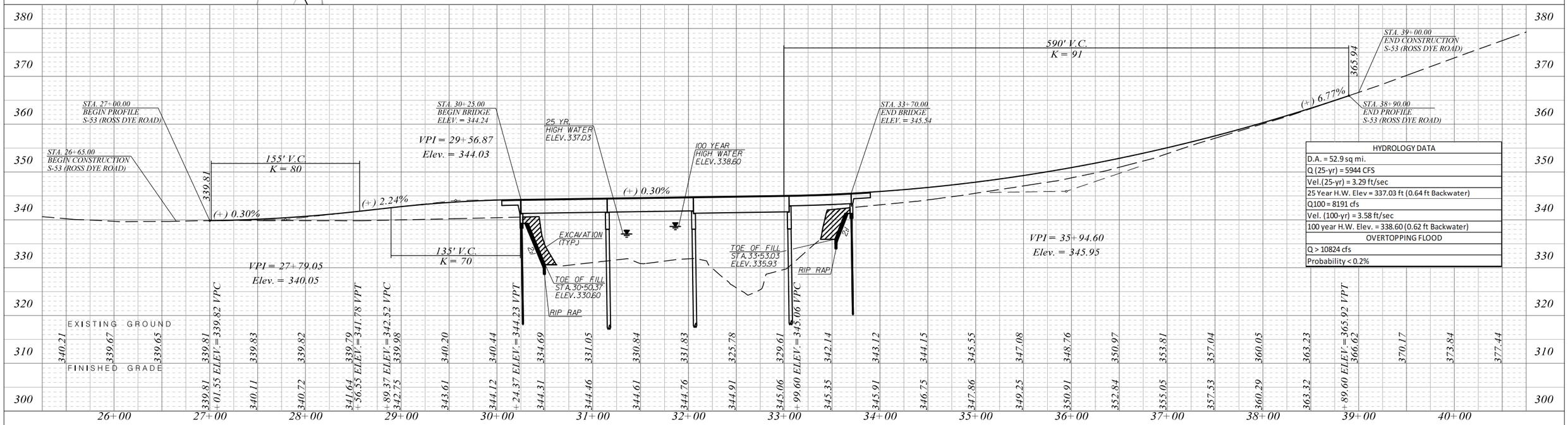


| HYDROLOGY DATA |
|---|
| D.A. = 52.9 sq mi. |
| Q (25-yr) = 5944 CFS |
| Vel.(25-yr) = 3.29 ft/sec |
| 25 Year H.W. Elev = 337.03 ft (0.64 ft Backwater) |
| Q100 = 8191 cfs |
| Vel. (100-yr) = 3.58 ft/sec |
| 100 year H.W. Elev. = 338.60 (0.62 ft Backwater) |
| OVERTOPPING FLOOD |
| Q > 10824 cfs |
| Probability < 0.2% |

E.S. WAGNER CO. 75 Year Anniversary 1947-2022

HOLT CONSULTING COMPANY, LLC.

NOT FOR CONSTRUCTION

| REV. NO. | BY | DATE | DESCRIPTION OF REVISION |
|---|---|---|---|
| 4 | | | |
| 3 | | | |
| 2 | | | |
| 1 | | | |

DESIGNED BY: _____ DATE _____
DRAWN BY: _____ DATE _____
CHECKED BY: _____ DATE _____

SOUTH CAROLINA
DEPARTMENT OF TRANSPORTATION

PLAN AND PROFILE SHEET
S-53 (ROSS DYE ROAD)
OVER LITTLE ROCKY CREEK
STA. 26+65.00 TO STA. 39+00.00

SHEET 6 | SCALE: 1" = 50'

| FED. RD. DIV. NO. | STATE | COUNTY | PROJECT ID | ROUTE NO. | SHEET NO. |
|---|---|---|---|---|---|
| 3 | SC | CHESTERFIELD | 8862230 | S-108 | 3 |

SCDOT
South Carolina Department of Transportation

NOTES:

✳ VARIABLE - THIS SLOPE MAY BE VARIED WHEN A DEEPER DITCH IS NECESSARY FOR DRAINAGE PURPOSES, USING A MINIMUM SLOPE OF 12:1 AND A MAXIMUM SLOPE OF 4:1. WHERE A DEEPER DITCH THAN PROVIDED BY A 4:1 IS NECESSARY, THE DITCH SHALL BE PLACED FARTHER FROM THE C/L CONTINUING THE 4:1 SLOPE TO PROVIDE FOR THE NECESSARY DEPTH.
SEE PROFILE FOR SPECIAL DITCH GRADES.

Ø WHERE CLEARZONE IS UNATTAINABLE OR END TREATMENT IS REQUIRED FOR BRIDGE APPROACH, ADD 3.75' TO SHOULDER FOR GUARDRAIL AND 2:1 FORESLOPE. ADDITIONAL SHOULDER WIDTH REQUIRED FOR END TREATMENT TYPE "TL2".
SEE SCDOT STANDARD DRAWING 805-115-50.

TRANSITION PAVED SHOULDER
LT STA. 117+15.08 TO 117+23.08
LT STA. 119+06.92 TO 119+14.92
RT STA. 117+15.08 TO 117+23.08
RT STA. 119+06.92 TO 119+14.92
SEE PLANS AND CROSS SECTIONS FOR DETAILS.

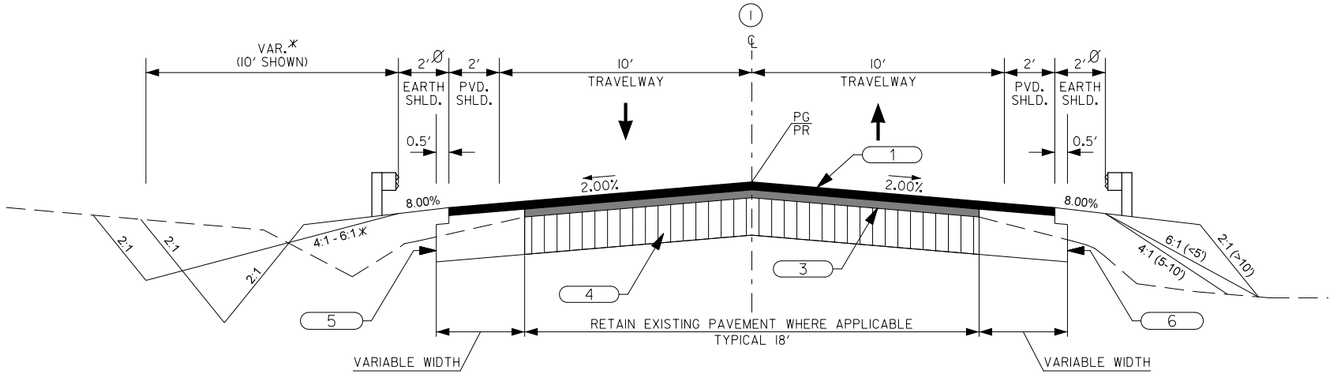


**USE THIS SECTION ON S-108 (OUTEN STREET) OVER BROWN CREEK**
**STA. 113+60.00 TO APPROX. STA. 115+05**
**APPROX. STA. 120+90 TO STA. 122+00.00**

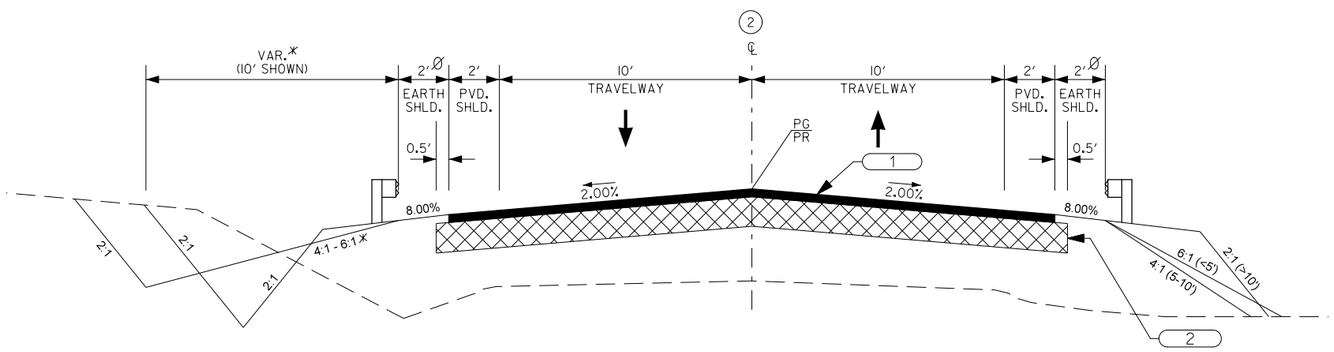


**USE THIS SECTION ON S-108 (OUTEN STREET) OVER BROWN CREEK**
**APPROX. STA. 115+05 TO APPROX. STA. 120+90**

**EXCEPTION: 100' x 30' BRIDGE**
**FROM STA. 117+65.00 TO STA. 118+65.00**

FUNCTIONAL CLASS

RURAL LOCAL GROUP 4

## LEGEND
## (PAVEMENT DESIGN)

| | |
|---|---|
| 1 | HOT MIX ASPHALT SURFACE COURSE TYPE C (175 LBS/SY) |
| 2 | HOT MIX ASPHALT BASE COURSE TYPE B (450 LBS/SY) |
| 3 | VARIABLE DEPTH HOT MIX ASPHALT SURFACE COURSE TYPE E < 1.5"<br>VARIABLE DEPTH HOT MIX ASPHALT INTERMEDIATE COURSE TYPE C > 1.5" |
| 4 | RETAIN EXISTING PAVEMENT |
| 5 | SHOULDER WIDENING MATERIAL (400 LBS/SY) |

| | DESIGN SPEED | | |
|---|---|---|---|
| ROUTE | MPH | FROM STA. | TO STA. |
| S-108 | 45 | 113+10.00 | 122+25.00 |
| | | | |
| | | | |
| | EXCEPTIONS TO DESIGN SPEED | | |
| | | | |
| | | | |
| | | | |

PAVEMENT DESIGN

APPROVED BY

DATE

E.S. WAGNER CO. 75 Year Anniversary 1947-2022

HOLT CONSULTING COMPANY, LLC.

| REV. NO. | BY | DATE | DESCRIPTION OF REVISION |
|---|---|---|---|
| 4 | | | |
| 3 | | | |
| 2 | | | |
| 1 | | | |

DESIGNED BY: _____ DATE _____
DRAWN BY: _____ DATE _____
CHECKED BY: _____ DATE _____

SOUTH CAROLINA
DEPARTMENT OF TRANSPORTATION

TYPICAL SECTION
S-108 (OUTEN STREET)
OVER BROWN CREEK

SHEET 3 | SCALE: N.T.S.

| FED. RD. DIV. NO. | STATE | COUNTY | PROJECT ID | ROUTE NO. | SHEET NO. |
|---|---|---|---|---|---|
| 3 | SC | CHESTERFIELD | 8862230 | S-108 | 6 |

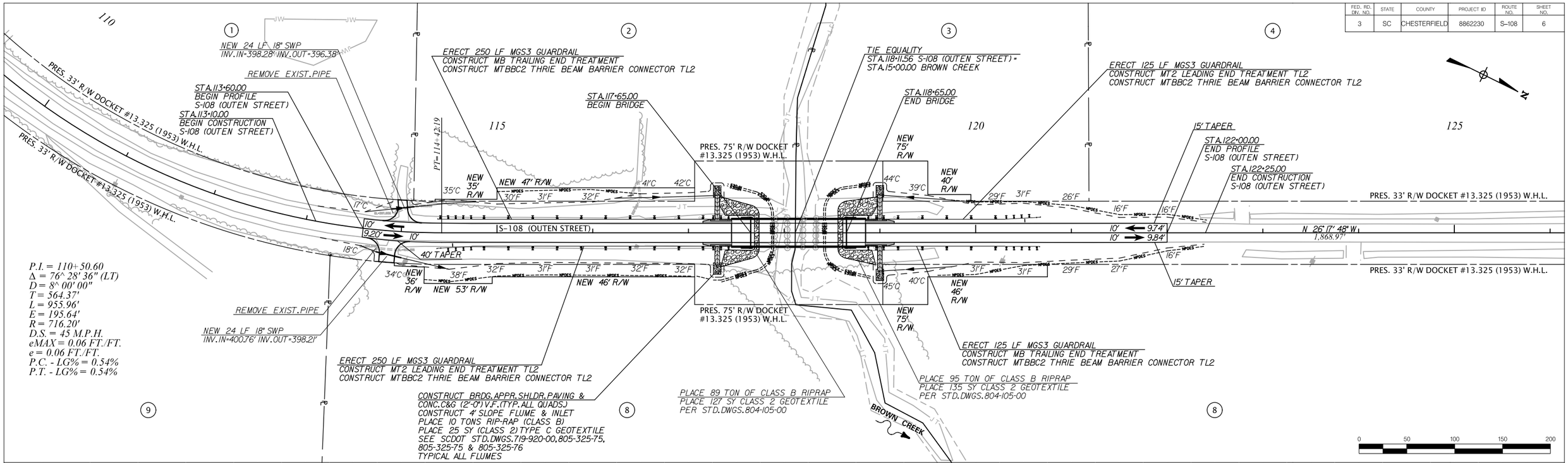


| HYDROLOGY DATA |
|---|
| D.A. = 3.10 sq mi. |
| Q (25-yr) = 1290 CFS |
| Vel.(25-yr) = 7.86 ft/sec |
| 25 Year H.W. Elev = 393.33 ft (0.95 ft Backwater) |
| Q100 = 1510 cfs |
| Vel. (100-yr) = 8.38 ft/sec |
| 100 year H.W. Elev. = 394.06 (1.70 ft Backwater) |
| OVERTOPPING FLOOD |
| Q > 2050 cfs |
| Probability < 0.2% |

E.S. WAGNER CO. 75 Year Anniversary 1947-2022

HOLT CONSULTING COMPANY, LLC.

NOT FOR CONSTRUCTION

| REV. NO. | BY | DATE | DESCRIPTION OF REVISION |
|---|---|---|---|
| 4 | | | |
| 3 | | | |
| 2 | | | |
| 1 | | | |

DESIGNED BY: _____ DATE _____
DRAWN BY: _____ DATE _____
CHECKED BY: _____ DATE _____

SOUTH CAROLINA
DEPARTMENT OF TRANSPORTATION

PLAN AND PROFILE SHEET
S-108 (OUTEN STREET)
OVER BROWN CREEK
STA. 113+10.00 TO STA. 122+25.00

SHEET 6 | SCALE: 1" = 50'

| FED. RD. DIV. NO. | STATE | COUNTY | PROJECT ID | ROUTE NO. | SHEET NO. |
|---|---|---|---|---|---|
| 3 | SC | ANDERSON | 8862230 | S-294 | 3 |

SCDOT
South Carolina Department of Transportation

NOTES:

✳ VARIABLE - THIS SLOPE MAY BE VARIED WHEN A DEEPER DITCH IS NECESSARY FOR DRAINAGE PURPOSES, USING A MINIMUM SLOPE OF 12:1 AND A MAXIMUM SLOPE OF 4:1. WHERE A DEEPER DITCH THAN PROVIDED BY A 4:1 IS NECESSARY, THE DITCH SHALL BE PLACED FARTHER FROM THE C/L CONTINUING THE 4:1 SLOPE TO PROVIDE FOR THE NECESSARY DEPTH.
SEE PROFILE FOR SPECIAL DITCH GRADES.

Ø WHERE CLEARZONE IS UNATTAINABLE OR END TREATMENT IS REQUIRED FOR BRIDGE APPROACH, ADD 3.75' TO SHOULDER FOR GUARDRAIL AND 2:1 FORESLOPE. ADDITIONAL SHOULDER WIDTH REQUIRED FOR END TREATMENT TYPE "TL2". SEE SCDOT STANDARD DRAWING 805-115-50.

TRANSITION PAVED SHOULDER
LT STA. 19+53.62 TO 19+72.48
LT STA. 21+83.25 TO 21+91.25
RT STA. 19+60.66 TO 19+69.08
RT STA. 21+83.92 TO 22+01.58
SEE PLANS AND CROSS SECTIONS FOR DETAILS.

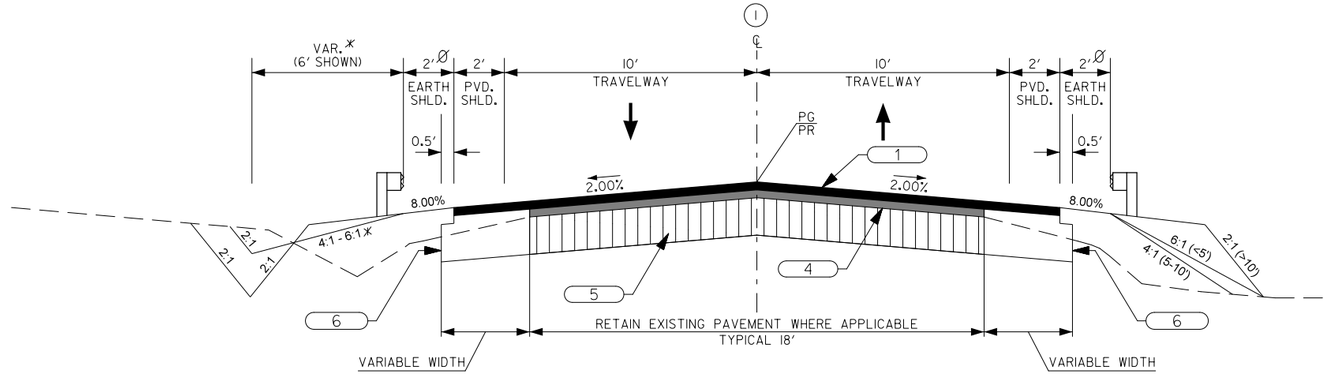


**USE THIS SECTION ON S-294 (EAST BROAD STREET) OVER WILSONS CREEK**
**STA. 17+64.00 TO APPROX. STA. 18+35**
**APPROX. STA. 24+15 TO STA. 25+00.00**

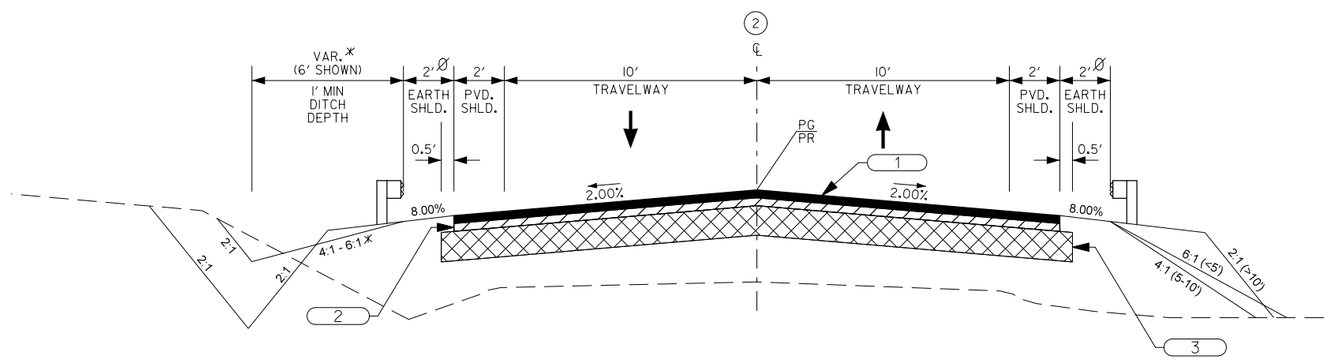


**USE THIS SECTION ON S-294 (EAST BROAD STREET) OVER WILSONS CREEK**
**APPROX. STA. 18+35 TO APPROX. STA. 24+15**

**EXCEPTION: 130.01' x 33' BRIDGE - (ALONG CENTERLINE)**
**FROM STA. 20+11.99 TO STA. 21+42.00**

## LEGEND
## (PAVEMENT DESIGN)

| | |
|---|---|
| 1 | HOT MIX ASPHALT SURFACE COURSE TYPE C (150 LBS/SY) |
| 2 | HOT MIX ASPHALT INTERMEDIATE COURSE TYPE C (175 LBS/SY) |
| 3 | HOT MIX ASPHALT BASE COURSE TYPE B (450 LBS/SY) |
| 4 | VARIABLE DEPTH HOT MIX ASPHALT SURFACE COURSE TYPE E < 1.5"<br>VARIABLE DEPTH HOT MIX ASPHALT INTERMEDIATE COURSE TYPE C > 1.5" |
| 5 | RETAIN EXISTING PAVEMENT |
| 6 | SHOULDER WIDENING MATERIAL (400 LBS/SY) |

FUNCTIONAL CLASS

RURAL MAJOR COLLECTOR

| | DESIGN SPEED | | |
|---|---|---|---|
| ROUTE | MPH | FROM STA. | TO STA. |
| S-294 | 35 | 17 + 64.00 | 25 + 50.00 |
| | | | |
| | | | |
| | EXCEPTIONS TO DESIGN SPEED | | |
| | | | |
| | | | |
| | | | |

PAVEMENT DESIGN

APPROVED BY

DATE

E.S. WAGNER CO. 75 Year Anniversary 1947-2022

HOLT CONSULTING COMPANY, LLC.

| REV. NO. | BY | DATE | DESCRIPTION OF REVISION |
|---|---|---|---|
| 4 | | | |
| 3 | | | |
| 2 | | | |
| 1 | | | |

DESIGNED BY: _____ DATE _____
DRAWN BY: _____ DATE _____
CHECKED BY: _____ DATE _____

SOUTH CAROLINA
DEPARTMENT OF TRANSPORTATION

TYPICAL SECTION
S-294 (EAST BROAD STREET)
OVER WILSONS CREEK

SHEET 3 | SCALE: N.T.S.

| FED. RD. DIV. NO. | STATE | COUNTY | PROJECT ID | ROUTE NO. | SHEET NO. |
|---|---|---|---|---|---|
| 3 | SC | ANDERSON | 8862230 | S-294 | 6 |

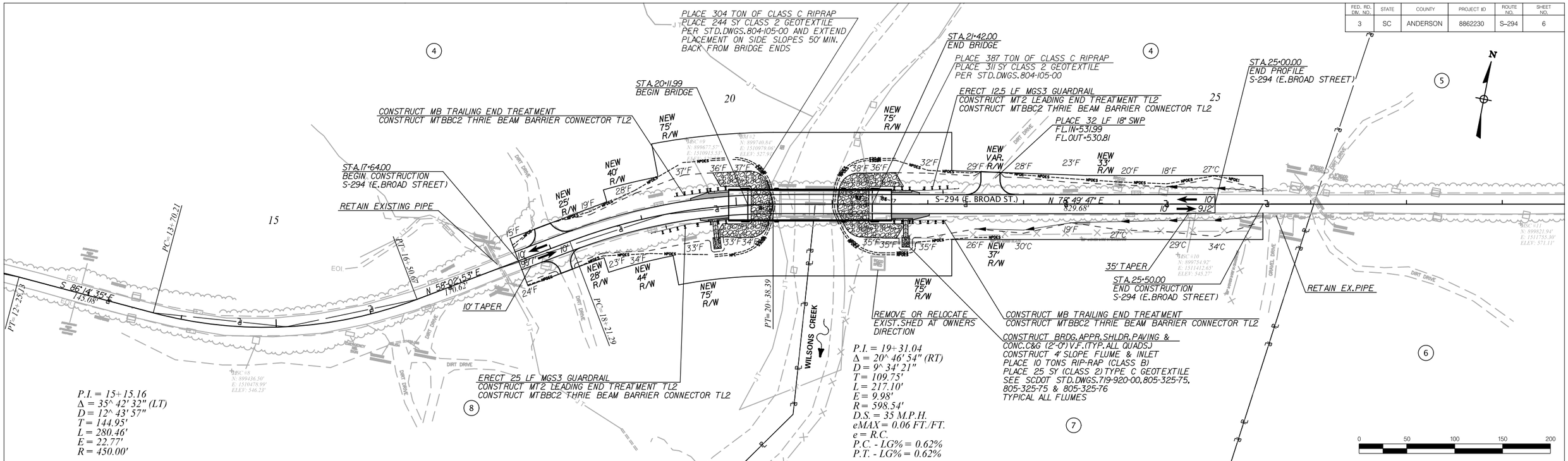


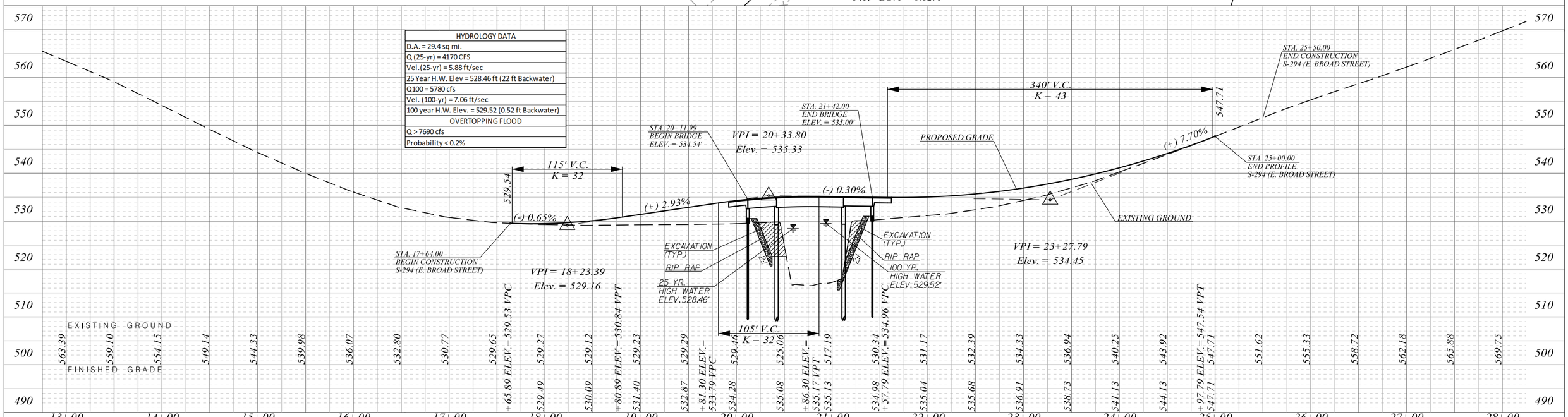


E.S. WAGNER CO. 75 Year Anniversary 1947-2022

HOLT CONSULTING COMPANY, LLC.

NOT FOR CONSTRUCTION

| REV. NO. | BY | DATE | DESCRIPTION OF REVISION |
|---|---|---|---|
| 4 | | | |
| 3 | | | |
| 2 | | | |
| 1 | | | |

DESIGNED BY: _____ DATE _____
DRAWN BY: _____ DATE _____
CHECKED BY: _____ DATE _____

SOUTH CAROLINA
DEPARTMENT OF TRANSPORTATION

PLAN AND PROFILE SHEET
S-294 (EAST BROAD STREET)
OVER WILSONS CREEK
STA. 17+64.00 TO STA. 25+50.00

SHEET 6 | SCALE: 1" = 50'

| FED. RD. DIV. NO. | STATE | COUNTY | PROJECT ID | ROUTE NO. | SHEET NO. |
|---|---|---|---|---|---|
| 3 | SC | LANCASTER | 8862230 | S-765 | 3 |

South Carolina Department of Transportation

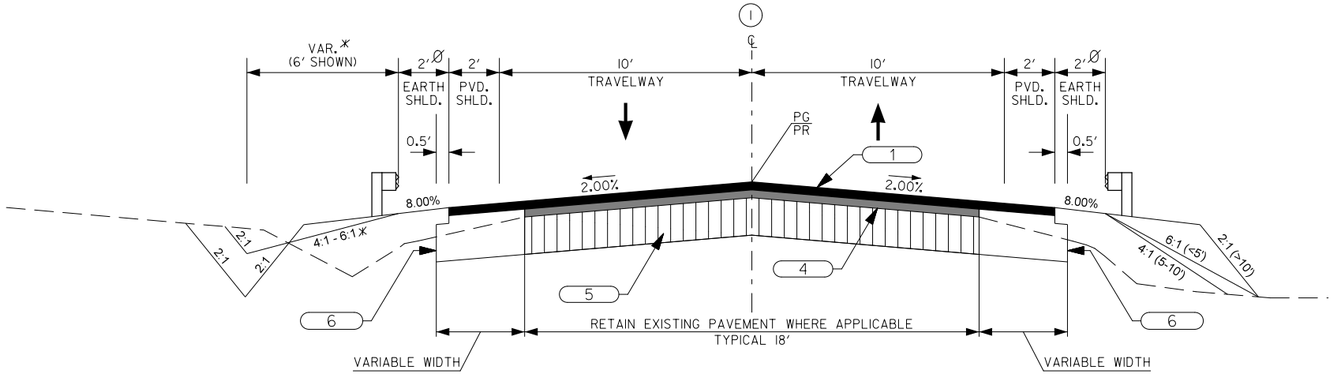


**USE THIS SECTION ON S-765 (HANGING ROCK CHURCH ROAD) OVER HANGING ROCK CREEK**
**STA. 31+90.90 TO APPROX. STA. 32+25**
**APPROX. STA. 38+05 TO STA. 38+85.90**

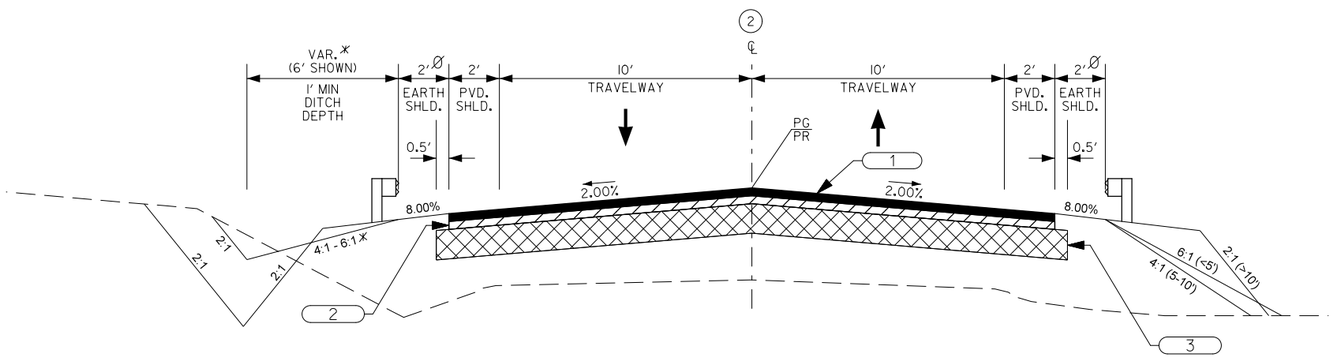


**USE THIS SECTION ON S-765 (HANGING ROCK CHURCH ROAD) OVER HANGING ROCK CREEK**
**APPROX. STA. 32+25 TO APPROX. STA. 38+05**

**EXCEPTION: 200' x 30' BRIDGE**
**FROM STA. 33+76.00 TO STA. 35+76.00**

NOTES:

✳ VARIABLE - THIS SLOPE MAY BE VARIED WHEN A DEEPER DITCH IS NECESSARY FOR DRAINAGE PURPOSES, USING A MINIMUM SLOPE OF 12:1 AND A MAXIMUM SLOPE OF 4:1. WHERE A DEEPER DITCH THAN PROVIDED BY A 4:1 IS NECESSARY, THE DITCH SHALL BE PLACED FARTHER FROM THE C/L CONTINUING THE 4:1 SLOPE TO PROVIDE FOR THE NECESSARY DEPTH.
SEE PROFILE FOR SPECIAL DITCH GRADES.

Ø WHERE CLEARZONE IS UNATTAINABLE OR END TREATMENT IS REQUIRED FOR BRIDGE APPROACH, ADD 3.75' TO SHOULDER FOR GUARDRAIL AND 2:1 FORESLOPE. ADDITIONAL SHOULDER WIDTH REQUIRED FOR END TREATMENT TYPE "TL2".
SEE SCDOT STANDARD DRAWING 805-115-50.

TRANSITION PAVED SHOULDER
LT STA. 33+26.75 TO 33+34.75
LT STA. 36+17.27 TO 36+25.28
RT STA. 33+26.75 TO 33+34.75
RT STA. 36+17.92 TO 36+25.92
SEE PLANS AND CROSS SECTIONS FOR DETAILS.

## LEGEND
## (PAVEMENT DESIGN)

| | |
|---|---|
| 1 | HOT MIX ASPHALT SURFACE COURSE TYPE C (150 LBS/SY) |
| 2 | HOT MIX ASPHALT INTERMEDIATE COURSE TYPE C (175 LBS/SY) |
| 3 | HOT MIX ASPHALT BASE COURSE TYPE B (450 LBS/SY) |
| 4 | VARIABLE DEPTH HOT MIX ASPHALT SURFACE COURSE TYPE E < 1.5"<br>VARIABLE DEPTH HOT MIX ASPHALT INTERMEDIATE COURSE TYPE C > 1.5" |
| 5 | RETAIN EXISTING PAVEMENT |
| 6 | SHOULDER WIDENING MATERIAL (400 LBS/SY) |

FUNCTIONAL CLASS

RURAL LOCAL GROUP 4

| | DESIGN SPEED | | |
|---|---|---|---|
| ROUTE | MPH | FROM STA. | TO STA. |
| S-765 | 40 | 31+50.00 | 38+85.90 |
| | | | |
| | | | |
| | EXCEPTIONS TO DESIGN SPEED | | |
| | | | |
| | | | |
| | | | |

PAVEMENT DESIGN

APPROVED BY

DATE

E.S. WAGNER CO. 75 Year Anniversary 1947-2022

HOLT CONSULTING COMPANY, LLC.

| REV. NO. | BY | DATE | DESCRIPTION OF REVISION |
|---|---|---|---|
| 4 | | | |
| 3 | | | |
| 2 | | | |
| 1 | | | |

DESIGNED BY: _____ DATE _____
DRAWN BY: _____ DATE _____
CHECKED BY: _____ DATE _____

SOUTH CAROLINA
DEPARTMENT OF TRANSPORTATION

TYPICAL SECTION
S-765 (HANGING ROCK CHURCH ROAD)
OVER HANGING ROCK CREEK

SHEET 3 | SCALE: N.T.S.

| FED. RD. DIV. NO. | STATE | COUNTY | PROJECT ID | ROUTE NO. | SHEET NO. |
|---|---|---|---|---|---|
| 3 | SC | LANCASTER | 8862230 | S-765 | 6 |

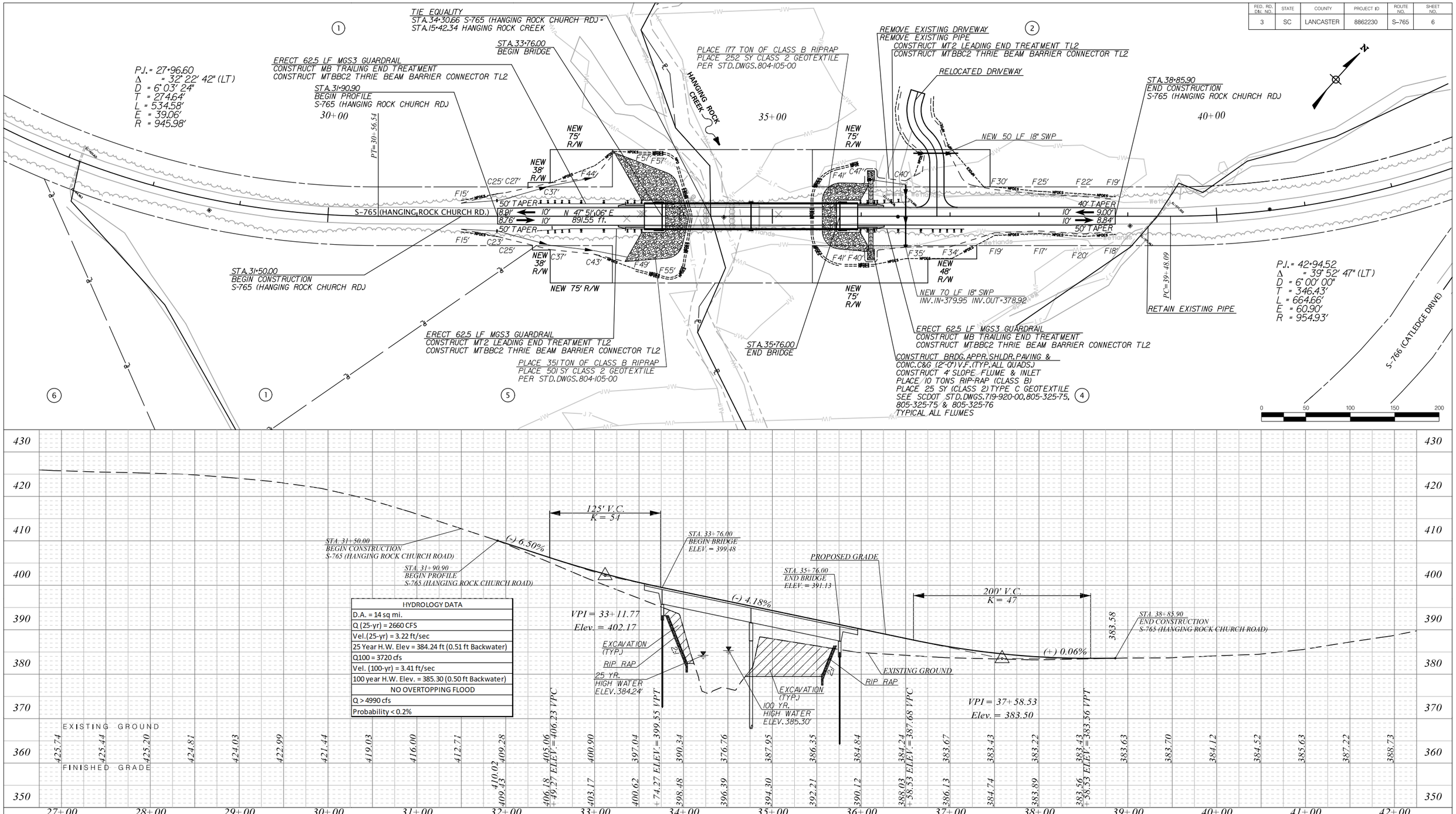


E.S. WAGNER CO. 75 Year Anniversary 1947-2022

HOLT CONSULTING COMPANY, LLC.

NOT FOR CONSTRUCTION

| REV. NO. | BY | DATE | DESCRIPTION OF REVISION |
|---|---|---|---|
| 4 | | | |
| 3 | | | |
| 2 | | | |
| 1 | | | |

DESIGNED BY: _____ DATE _____
DRAWN BY: _____ DATE _____
CHECKED BY: _____ DATE _____

SOUTH CAROLINA
DEPARTMENT OF TRANSPORTATION

PLAN AND PROFILE SHEET
S-765 (HANGING ROCK CHURCH ROAD)
OVER HANGING ROCK CREEK
STA. 31+50.00 TO STA. 38+85.90

SHEET 6 | SCALE: 1" = 50'

# APPENDIX A.2

## CONCEPTUAL BRIDGE PLANS

BR01_041153_BP01.dgn

| BRIDGE PLANS ID | SHEET NO. |
|---|---|
| P041153-B01 | 1 |

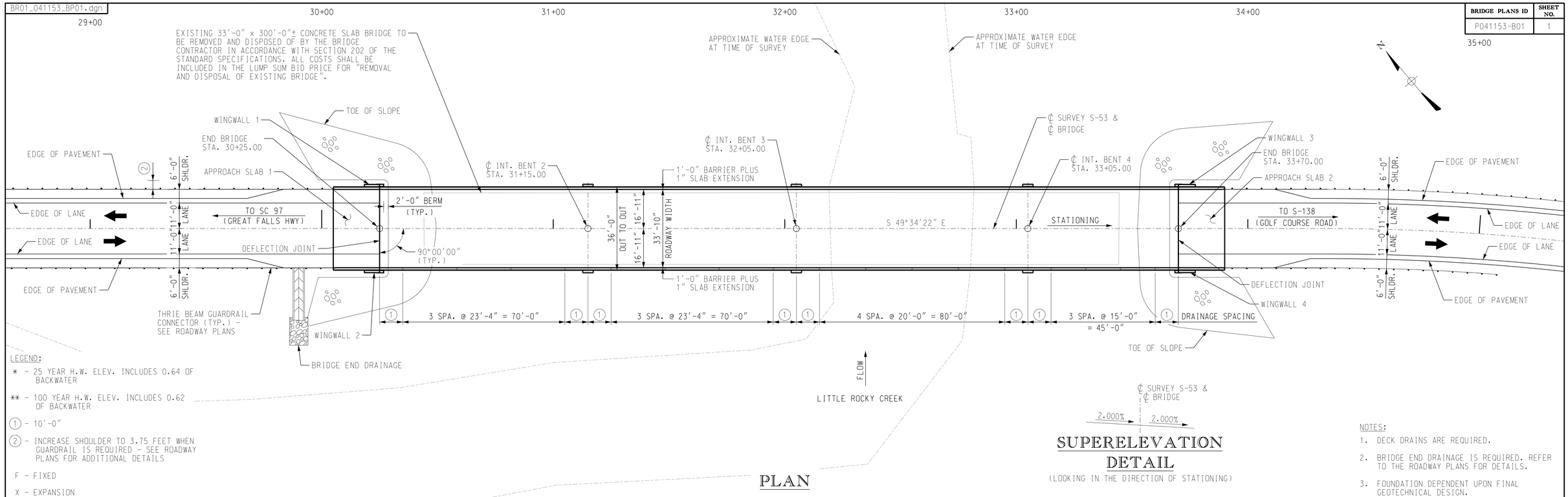


LEGEND:

* - 25 YEAR H.W. ELEV. INCLUDES 0.64 OF BACKWATER

** - 100 YEAR H.W. ELEV. INCLUDES 0.62 OF BACKWATER

(1) - 10'-0"

(2) - INCREASE SHOULDER TO 3.75 FEET WHEN GUARDRAIL IS REQUIRED - SEE ROADWAY PLANS FOR ADDITIONAL DETAILS

F - FIXED

X - EXPANSION

## PLAN




## SUPERELEVATION DETAIL

(LOOKING IN THE DIRECTION OF STATIONING)

NOTES:

1. DECK DRAINS ARE REQUIRED.
2. BRIDGE END DRAINAGE IS REQUIRED. REFER TO THE ROADWAY PLANS FOR DETAILS.
3. FOUNDATION DEPENDENT UPON FINAL GEOTECHNICAL DESIGN.

### VERTICAL CURVE 1 DATA

P.I. STATION (FT) : 29+56.87
P.I. ELEVATION : 344.032
CURVE LENGTH (FT) : 135.0'
g1 in % : +2.240%
g2 out % : +0.300%

### VERTICAL CURVE 2 DATA

P.I. STATION (FT) : 35+94.60
P.I. ELEVATION : 345.945
CURVE LENGTH (FT) : 590.0'
g1 in % : +0.003%
g2 out % : +6.770%

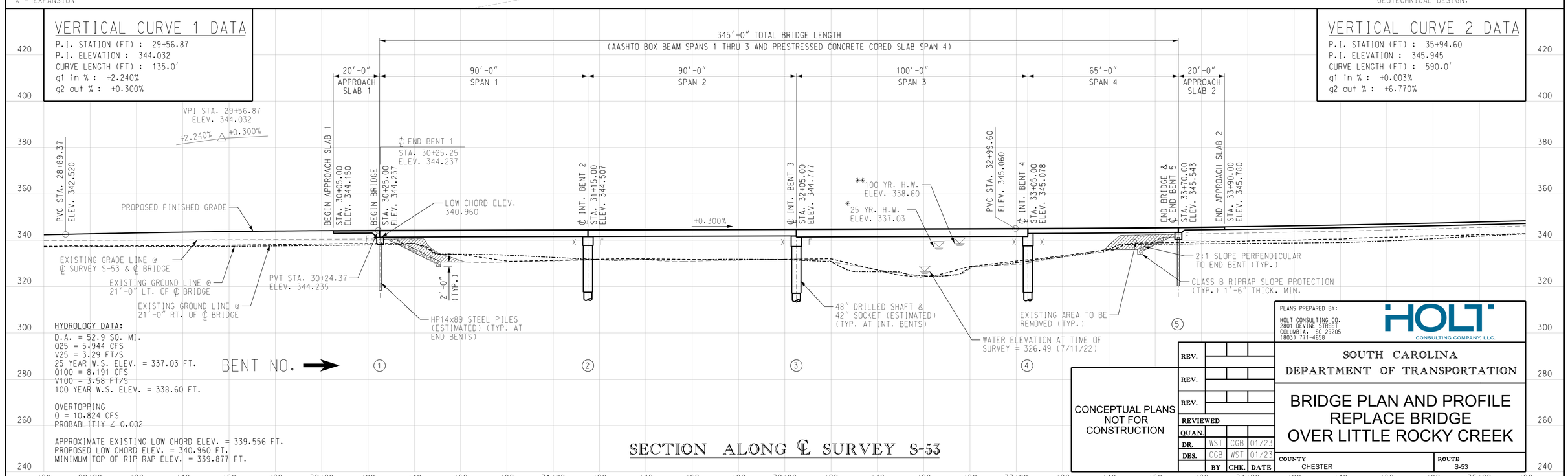


HYDROLOGY DATA:

D.A. = 52.9 SQ. MI.
Q25 = 5,944 CFS
V25 = 3.29 FT/S
25 YEAR W.S. ELEV. = 337.03 FT.
Q100 = 8,191 CFS
V100 = 3.58 FT/S
100 YEAR W.S. ELEV. = 338.60 FT.

OVERTOPPING
Q = 10.824 CFS
PROBABLITIY ∠ 0.002

APPROXIMATE EXISTING LOW CHORD ELEV. = 339.556 FT.
PROPOSED LOW CHORD ELEV. = 340.960 FT.
MINIMUM TOP OF RIP RAP ELEV. = 339.877 FT.

## SECTION ALONG ℄ SURVEY S-53

CONCEPTUAL PLANS NOT FOR CONSTRUCTION

| | | | |
|---|---|---|---|
| REV. | | | |
| REV. | | | |
| REV. | | | |
| REVIEWED | | | |
| QUAN. | | | |
| DR. | WST | CGB | 01/23 |
| DES. | CGB | WST | 01/23 |
| | BY | CHK. | DATE |


PLANS PREPARED BY:
HOLT CONSULTING CO.
2801 DEVINE STREET
COLUMBIA, SC 29205
(803) 771-4658
HOLT CONSULTING COMPANY, LLC.


SOUTH CAROLINA DEPARTMENT OF TRANSPORTATION

# BRIDGE PLAN AND PROFILE REPLACE BRIDGE OVER LITTLE ROCKY CREEK

COUNTY: CHESTER
ROUTE: S-53

1/31/2023

BR01_041153_EB_01.dgn

| BRIDGE PLANS ID | SHEET NO. |
|---|---|
| P041153-B01 | 2 |

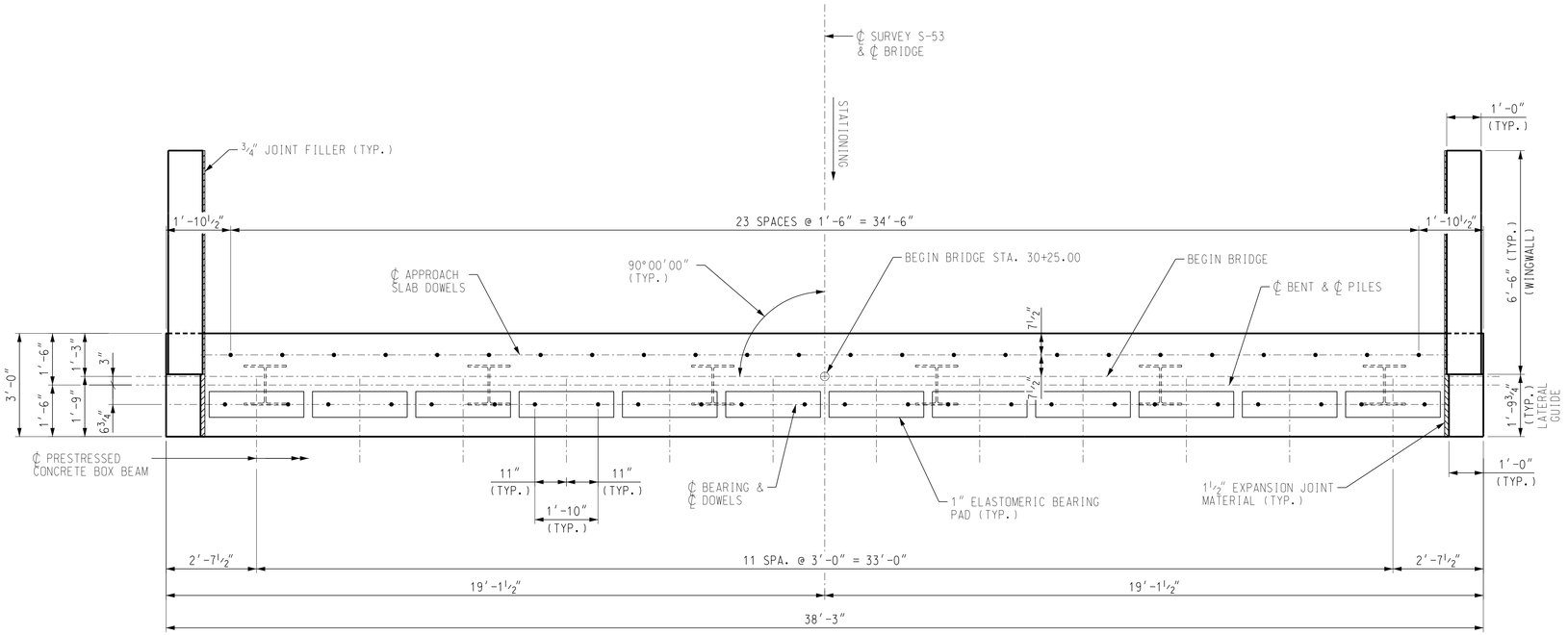


## PLAN

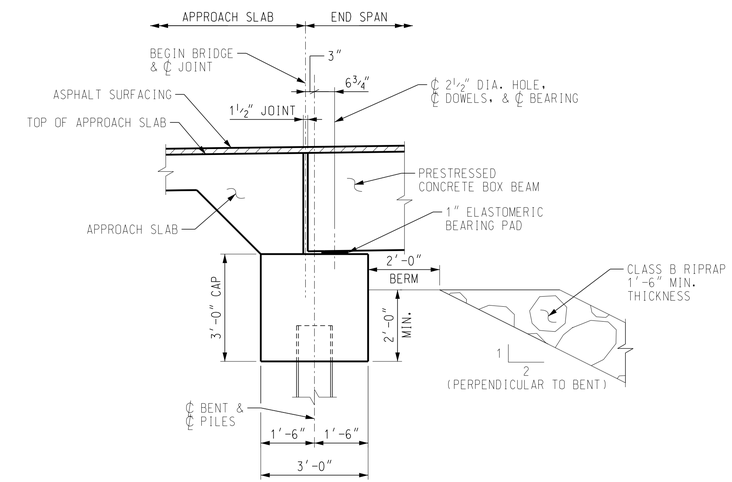


## SECTION THRU END BENT

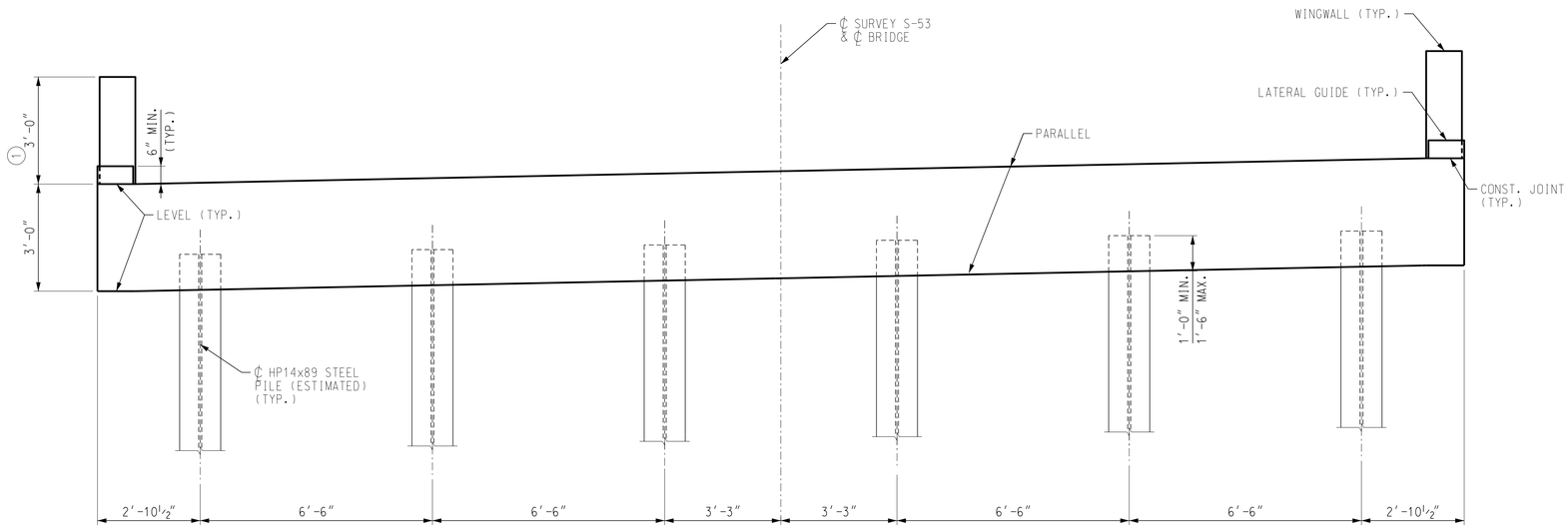


PILES ARE NUMBERED FROM RIGHT TO LEFT LOOKING IN OPPOSITE DIRECTON OF STATIONING

## ELEVATION

(LOOKING IN OPPOSITE DIRECTION OF STATIONING)

LEGEND:

(1) - WINGWALL HEIGHT MEASURED AT BEGIN BRIDGE OR END BRIDGE. WINGWALL HEIGHT VARIES WITH ROADWAY PROFILE.

CONCEPTUAL PLANS NOT FOR CONSTRUCTION

| | | | |
|---|---|---|---|
| REV. | | | |
| REV. | | | |
| REV. | | | |
| REVIEWED | | | |
| QUAN. | | | |
| DR. | WST | CGB | 01/23 |
| DES. | CGB | WST | 01/23 |
| | BY | CHK. | DATE |


PLANS PREPARED BY:
HOLT CONSULTING COMPANY, LLC
2801 DEVINE STREET, SUITE 201
COLUMBIA, SC 29205
(803) 771-4658


SOUTH CAROLINA
DEPARTMENT OF TRANSPORTATION

# END BENT 1 PLAN AND ELEVATION

| COUNTY | ROUTE |
|---|---|
| CHESTER | S-53 |

1/31/2023

BR01_041153_EB_02.dgn

| BRIDGE PLANS ID | SHEET NO. |
|---|---|
| P041153-BR01 | 3 |

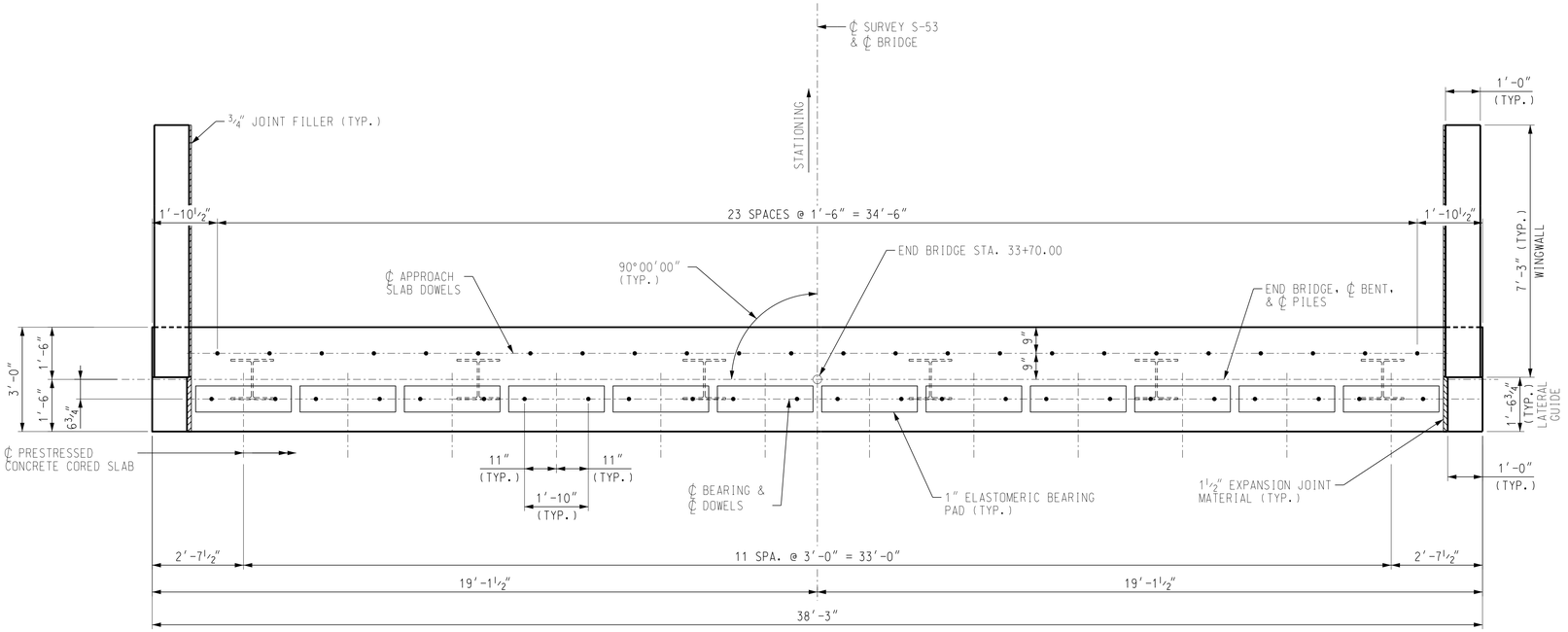


## PLAN

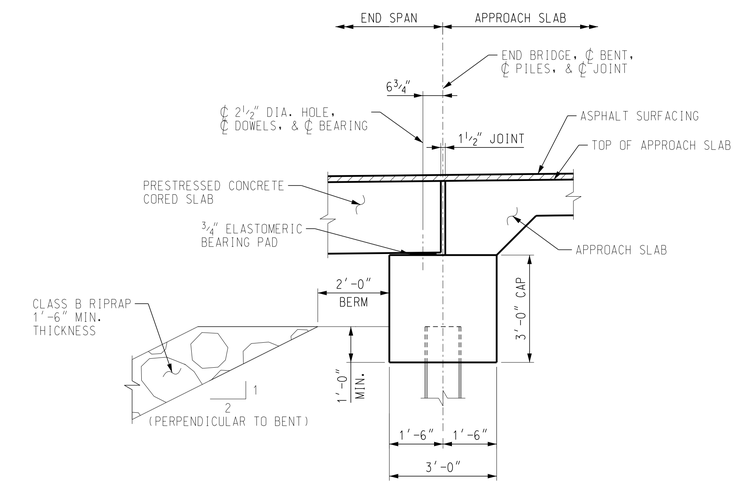


## SECTION THRU END BENT

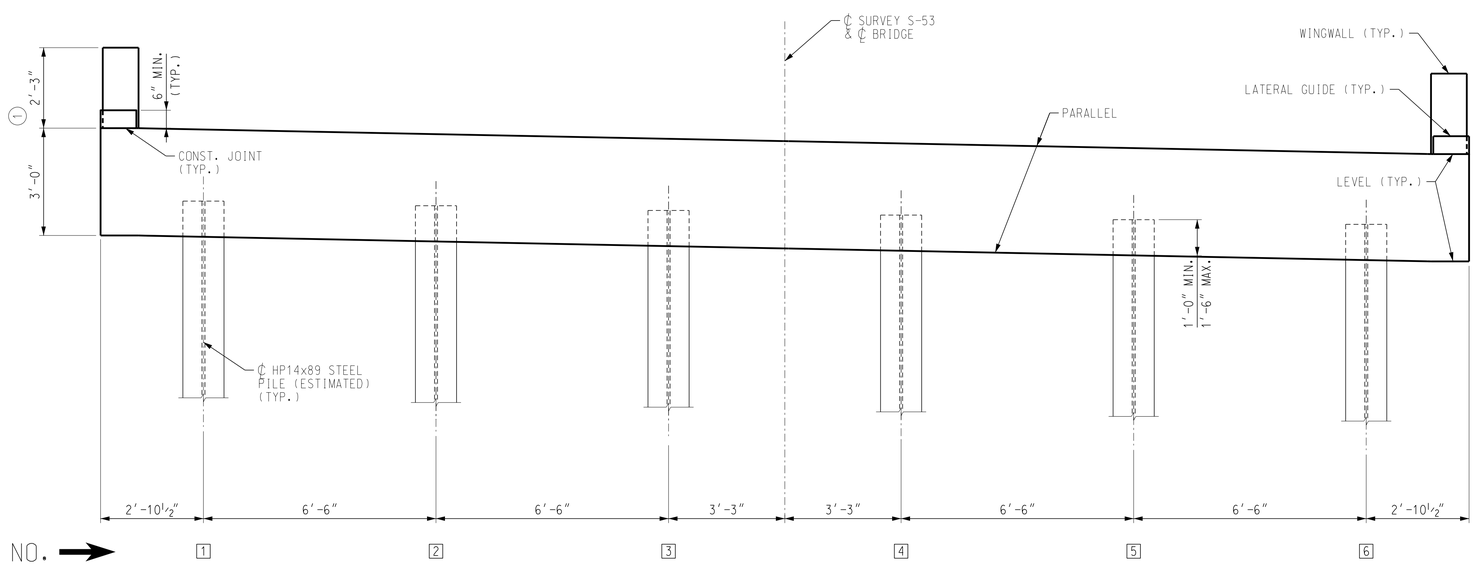


PILES ARE NUMBERED FROM LEFT TO RIGHT LOOKING IN DIRECTON OF STATIONING

## ELEVATION

(LOOKING IN DIRECTION OF STATIONING)

LEGEND:

(1) - WINGWALL HEIGHT MEASURED AT BEGIN BRIDGE OR END BRIDGE. WINGWALL HEIGHT VARIES WITH ROADWAY PROFILE.


PLANS PREPARED BY:

HOLT CONSULTING COMPANY, LLC
2801 DEVINE STREET, SUITE 201
COLUMBIA, SC 29205
(803) 771-4658


HOLT CONSULTING COMPANY, LLC.

SOUTH CAROLINA
DEPARTMENT OF TRANSPORTATION

CONCEPTUAL PLANS NOT FOR CONSTRUCTION

| | BY | CHK. | DATE |
|---|---|---|---|
| REV. | | | |
| REV. | | | |
| REV. | | | |
| REVIEWED | | | |
| QUAN. | | | |
| DR. | WST | CGB | 01/23 |
| DES. | CGB | WST | 01/23 |

# END BENT 5
# PLAN AND ELEVATION

| COUNTY | ROUTE |
|---|---|
| CHESTER | S-53 |

1/31/2023

BR01_041153_BT_01.dgn

| BRIDGE PLANS ID | SHEET NO. |
|---|---|
| P041153-BR01 | 4 |

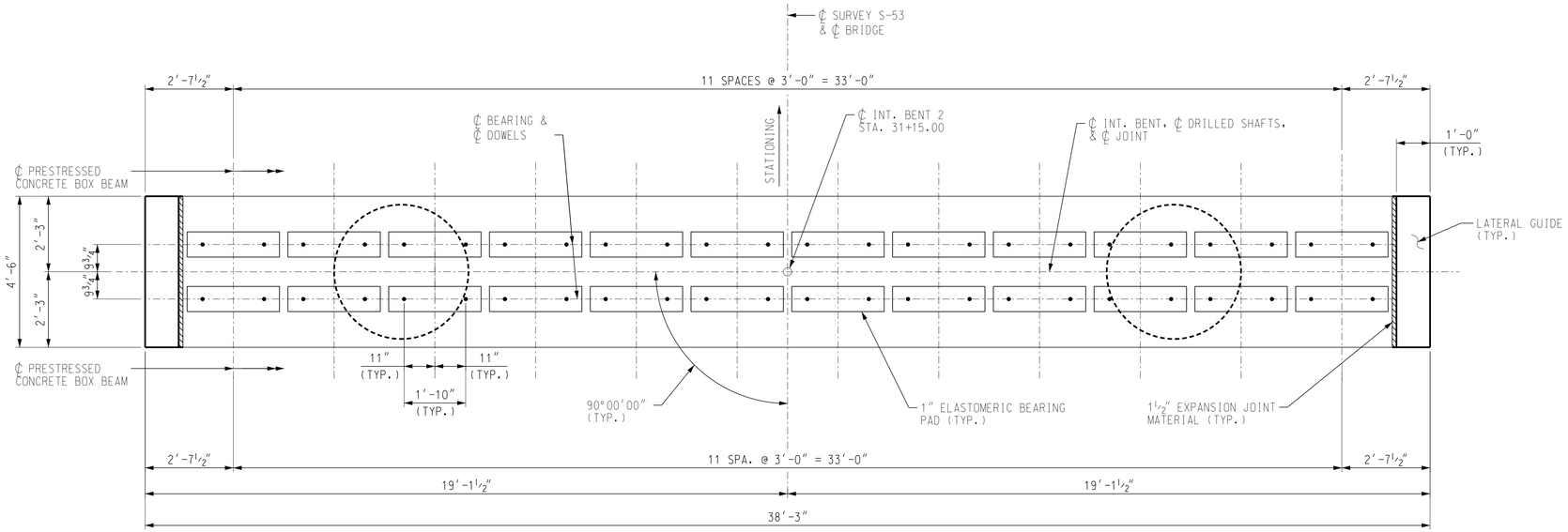


PLAN

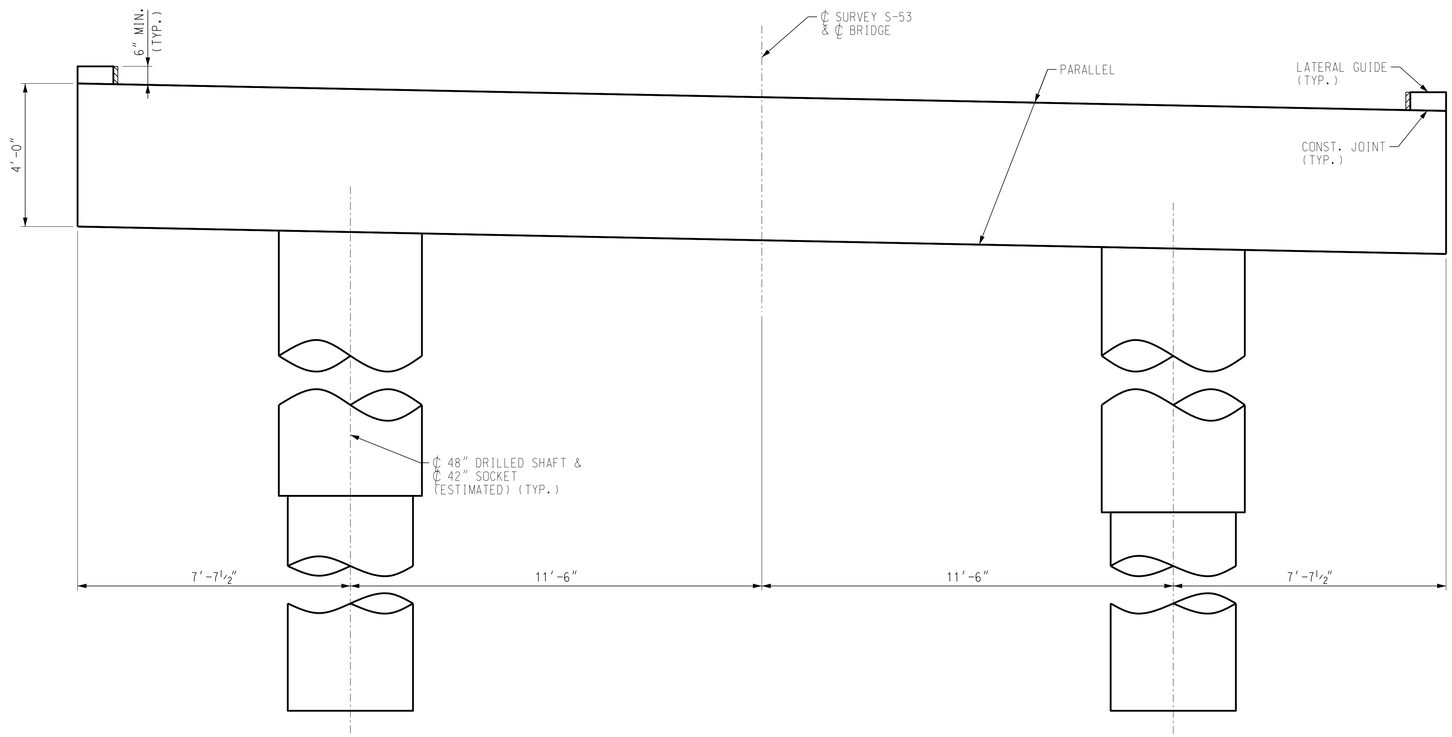


SHAFT NO. →

DRILLED SHAFTS ARE NUMBERED FROM LEFT TO RIGHT LOOKING IN DIRECTON OF STATIONING

ELEVATION

(LOOKING IN DIRECTION OF STATIONING)

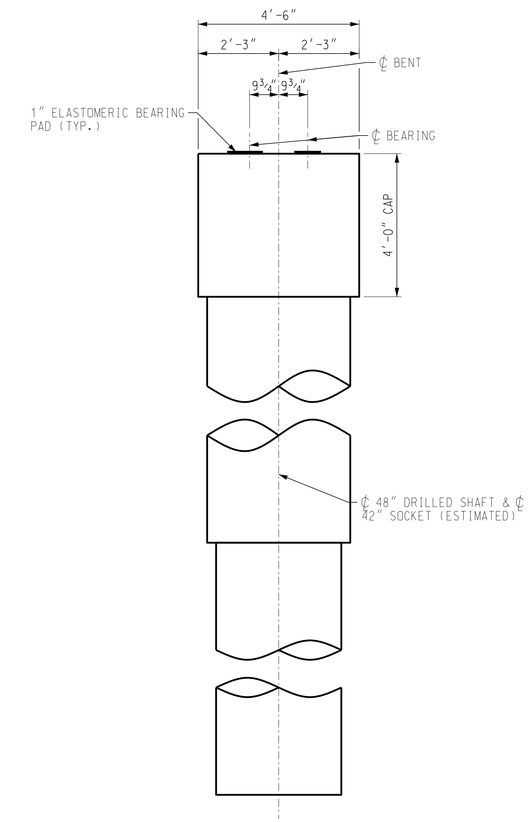


SECTION THRU INT. BENT

PLANS PREPARED BY:

HOLT CONSULTING COMPANY, LLC
2801 DEVINE STREET, SUITE 201
COLUMBIA, SC 29205
(803) 771-4658

HOLT CONSULTING COMPANY, LLC.

SOUTH CAROLINA
DEPARTMENT OF TRANSPORTATION

CONCEPTUAL PLANS NOT FOR CONSTRUCTION

| | | | |
|---|---|---|---|
| REV. | | | |
| REV. | | | |
| REV. | | | |
| REVIEWED | | | |
| QUAN. | | | |
| DR. | WST | CGB | 01/23 |
| DES. | CGB | WST | 01/23 |
| | BY | CHK. | DATE |

# INTERIOR BENT 2 PLAN AND ELEVATION

| COUNTY | ROUTE |
|---|---|
| CHESTER | S-53 |

1/31/2023

BR01_041153_BT_02.dgn

| BRIDGE PLANS ID | SHEET NO. |
|---|---|
| P041153-BR01 | 5 |

LEGEND:

1 - SPAN 2 & 3: PRESTRESSED CONCRETE BOX BEAM
SPAN 4: PRESTRESSED CONCRETE CORED SLAB

2 - 1" ELASTOMERIC BEARING PAD (BOX BEAM)
3/4" ELASTOMERIC BEARING PAD (CORED SLAB)

3 - SPAN 2 & 3: 9 3/4" (BOX BEAM)
SPAN 4: 6 3/4" (CORED SLAB)

4 - INT. BENT 3, SPAN 2: 6"
INT. BENT 4, SPAN 4: 1'-3 1/4"

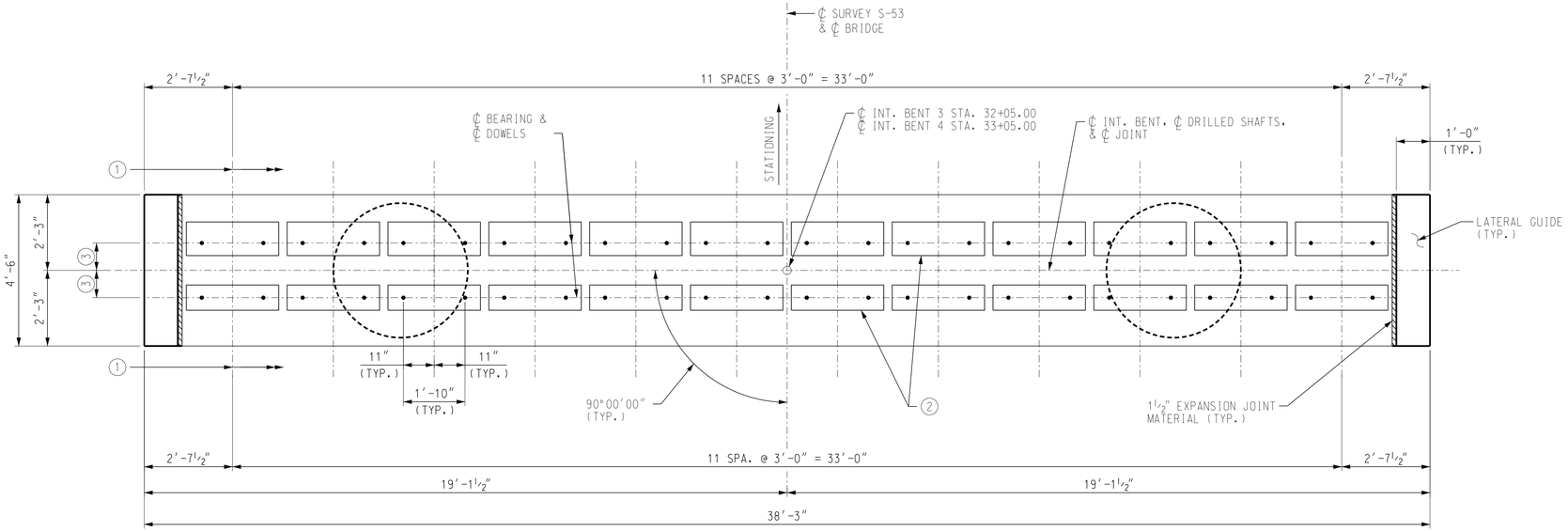


PLAN

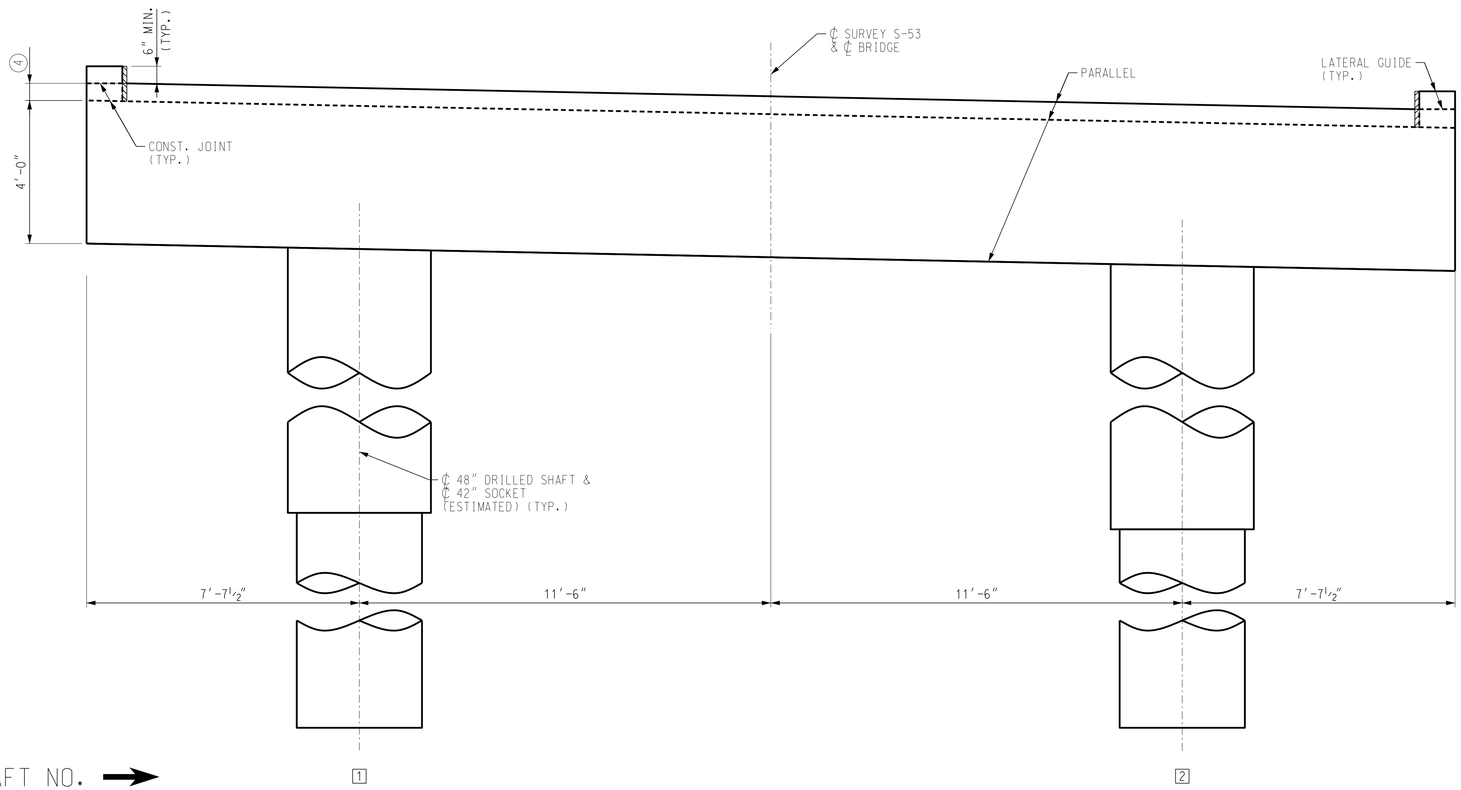


SHAFT NO. →
DRILLED SHAFTS ARE NUMBERED FROM LEFT TO RIGHT LOOKING IN DIRECTON OF STATIONING

ELEVATION

(LOOKING IN DIRECTION OF STATIONING)
(INTERIOR BENT 3 SHOWN, INTERIOR BENT 4 SIMILAR)

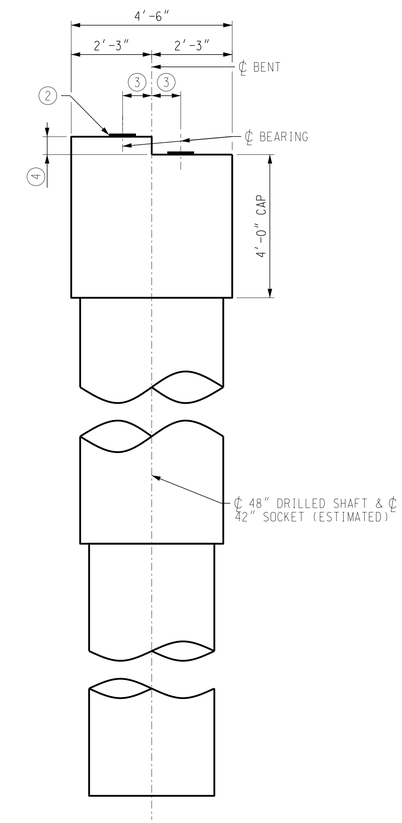


SECTION THRU INT. BENT

CONCEPTUAL PLANS NOT FOR CONSTRUCTION

| | | | |
|---|---|---|---|
| REV. | | | |
| REV. | | | |
| REV. | | | |
| REVIEWED | | | |
| QUAN. | | | |
| DR. | WST | CGB | 01/23 |
| DES. | CGB | WST | 01/23 |
| | BY | CHK. | DATE |

PLANS PREPARED BY:
HOLT CONSULTING COMPANY, LLC
2801 DEVINE STREET, SUITE 201
COLUMBIA, SC 29205
(803) 771-4658

HOLT CONSULTING COMPANY, LLC.

SOUTH CAROLINA
DEPARTMENT OF TRANSPORTATION

INTERIOR BENTS 3 & 4
PLAN AND ELEVATION

| COUNTY | ROUTE |
|---|---|
| CHESTER | S-53 |

1/31/2023

BR01_041153_SX_01.dgn

| BRIDGE PLANS ID | SHEET NO. |
|---|---|
| P041153-BR01 | 6 |

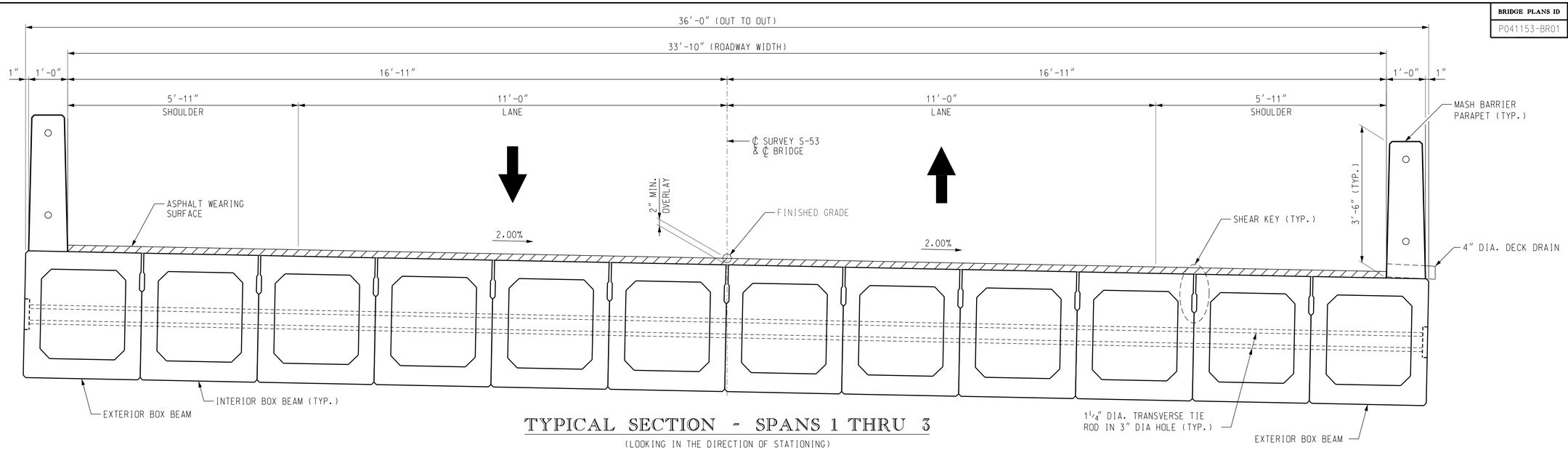


## TYPICAL SECTION - SPANS 1 THRU 3

(LOOKING IN THE DIRECTION OF STATIONING)

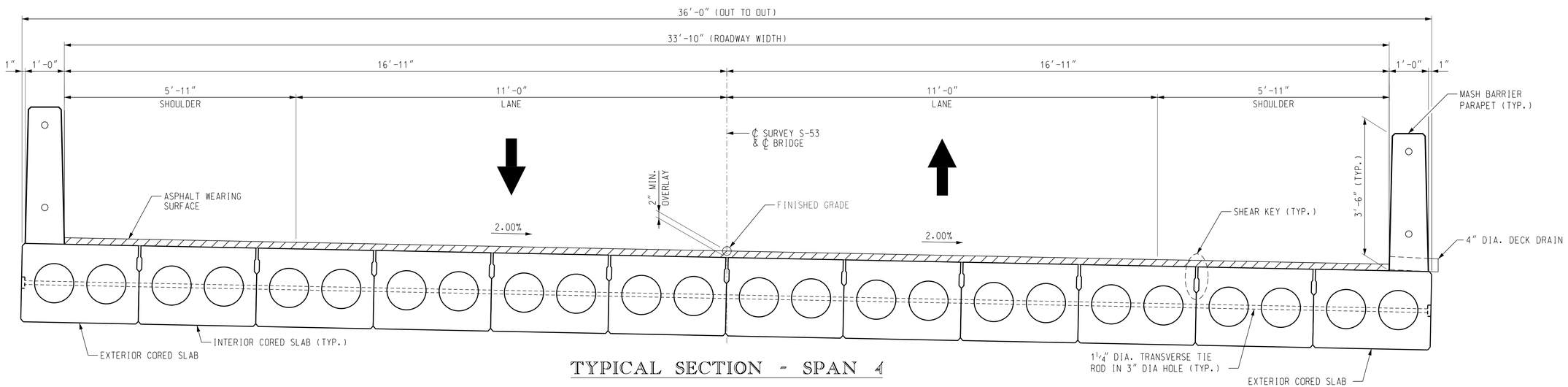


## TYPICAL SECTION - SPAN 4

(LOOKING IN THE DIRECTION OF STATIONING)

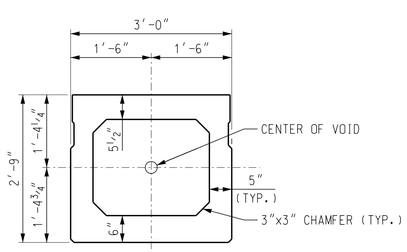


## INTERIOR BOX BEAM SECTION SPANS 1 & 2

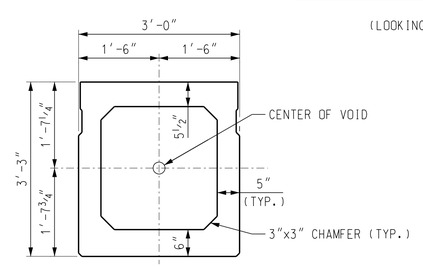


## INTERIOR BOX BEAM SECTION SPAN 3

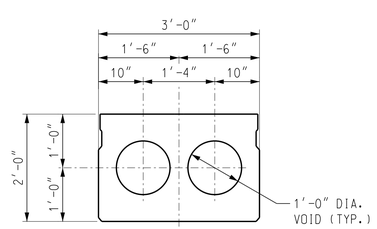


## INTERIOR CORED SLAB SECTION SPAN 4

CONCEPTUAL PLANS NOT FOR CONSTRUCTION

| | | | |
|---|---|---|---|
| REV. | | | |
| REV. | | | |
| REV. | | | |
| REVIEWED | | | |
| QUAN. | | | |
| DR. | WST | CGB | 01/23 |
| DES. | CGB | WST | 01/23 |
| | BY | CHK. | DATE |


PLANS PREPARED BY:
HOLT CONSULTING COMPANY, LLC
2801 DEVINE STREET, SUITE 201
COLUMBIA, SC 29205
(803) 771-4658
HOLT CONSULTING COMPANY, LLC.


SOUTH CAROLINA
DEPARTMENT OF TRANSPORTATION

# TYPICAL SECTION

COUNTY: CHESTER

ROUTE: S-53

1/31/2023

BR01_041181_BP01.dgn

| BRIDGE PLANS ID | SHEET NO. |
|---|---|
| P041181-B01 | 1 |

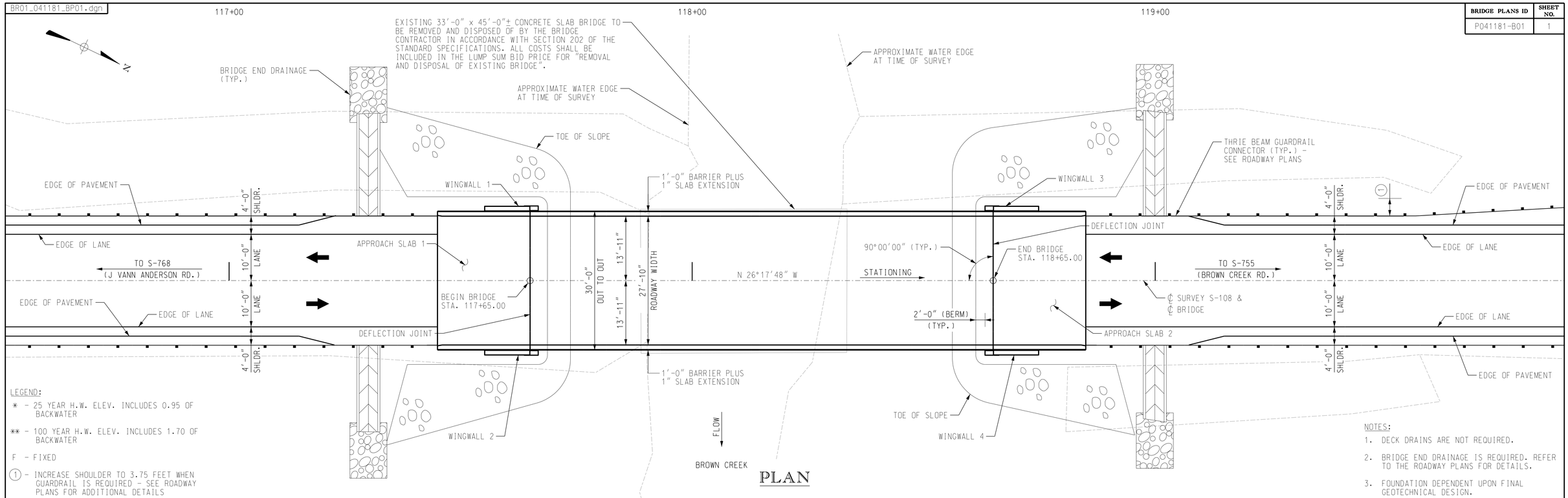


PLAN

LEGEND:

* - 25 YEAR H.W. ELEV. INCLUDES 0.95 OF BACKWATER

** - 100 YEAR H.W. ELEV. INCLUDES 1.70 OF BACKWATER

F - FIXED

(1) - INCREASE SHOULDER TO 3.75 FEET WHEN GUARDRAIL IS REQUIRED - SEE ROADWAY PLANS FOR ADDITIONAL DETAILS

NOTES:

1. DECK DRAINS ARE NOT REQUIRED.
2. BRIDGE END DRAINAGE IS REQUIRED. REFER TO THE ROADWAY PLANS FOR DETAILS.
3. FOUNDATION DEPENDENT UPON FINAL GEOTECHNICAL DESIGN.

## VERTICAL CURVE 1 DATA

P.I. STATION (FT) : 115+53.73
P.I. ELEVATION : 397.962
CURVE LENGTH (FT) : 329.2'
g1 in % : -2.710%
g2 out % : +1.450%

## VERTICAL CURVE 2 DATA

P.I. STATION (FT) : 118+46.08
P.I. ELEVATION : 402.201
CURVE LENGTH (FT) : 250.0'
g1 in % : +1.450%
g2 out % : -2.534%

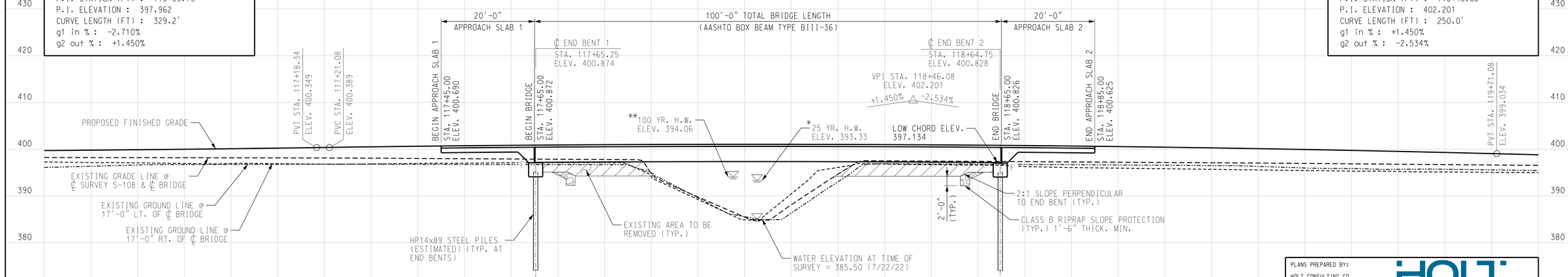


HYDROLOGY DATA:
D.A. = 3.10 SQ. MI.
Q25 = 1,290 CFS
V25 = 7.86 FT/S
25 YEAR W.S. ELEV. = 393.33 FT.
Q100 = 1,510 CFS
V100 = 8.38 FT/S
100 YEAR W.S. ELEV. = 394.06 FT.

OVERTOPPING
Q = 2,050 CFS
PROBABLITIY ∠ 0.002

APPROXIMATE EXISTING LOW CHORD ELEV. = 395.796 FT.
PROPOSED LOW CHORD ELEV. = 397.134 FT.
MINIMUM TOP OF RIP RAP ELEV. = 395.051 FT.

SECTION ALONG ℄ SURVEY S-108

CONCEPTUAL PLANS NOT FOR CONSTRUCTION

| | BY | CHK. | DATE |
|---|---|---|---|
| REV. | | | |
| REV. | | | |
| REV. | | | |
| REVIEWED | | | |
| QUAN. | | | |
| DR. | WST | CGB | 01/23 |
| DES. | CGB | WST | 01/23 |

PLANS PREPARED BY:
HOLT CONSULTING CO.
2801 DEVINE STREET
COLUMBIA, SC 29205
(803) 771-4658
HOLT CONSULTING COMPANY, LLC.

SOUTH CAROLINA DEPARTMENT OF TRANSPORTATION

BRIDGE PLAN AND PROFILE
REPLACE BRIDGE
OVER BROWN CREEK

COUNTY: CHESTERFIELD
ROUTE: S-108

1/31/2023

BR01_041181_EB_01.dgn

| BRIDGE PLANS ID | SHEET NO. |
|---|---|
| P041181-B01 | 2 |

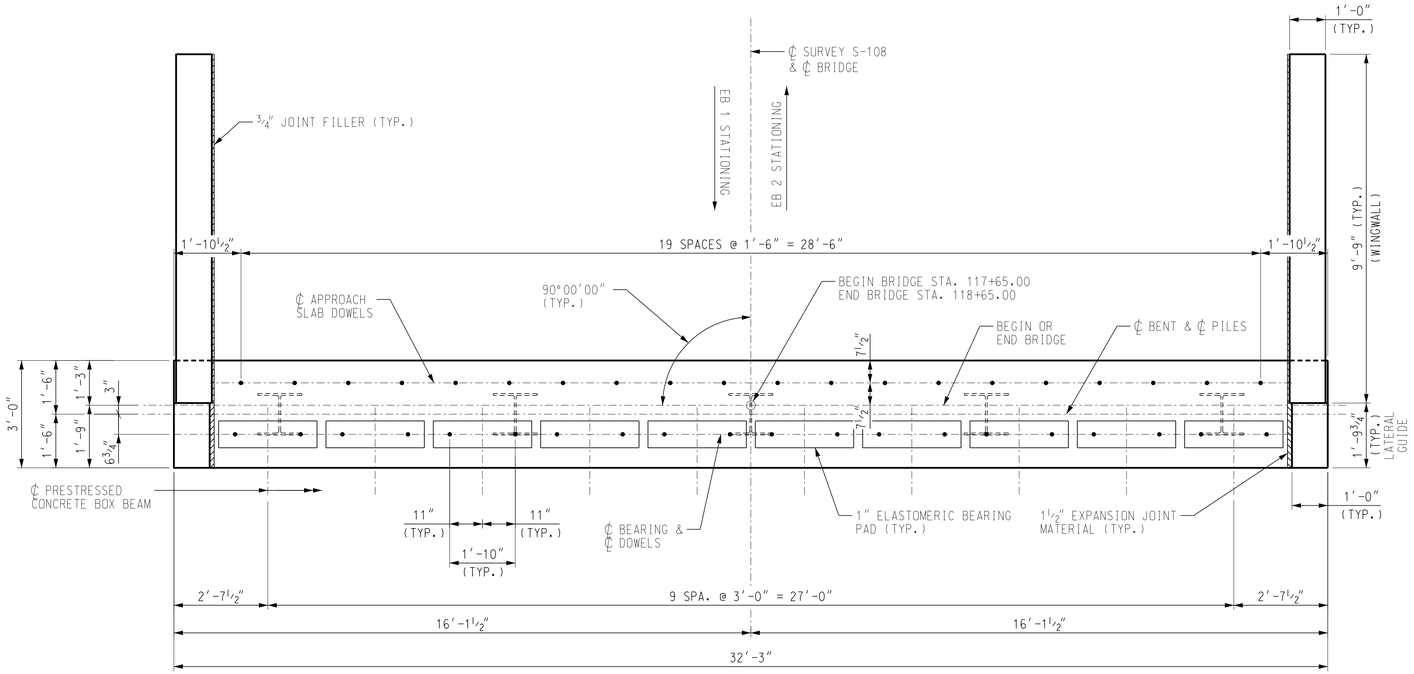


## PLAN

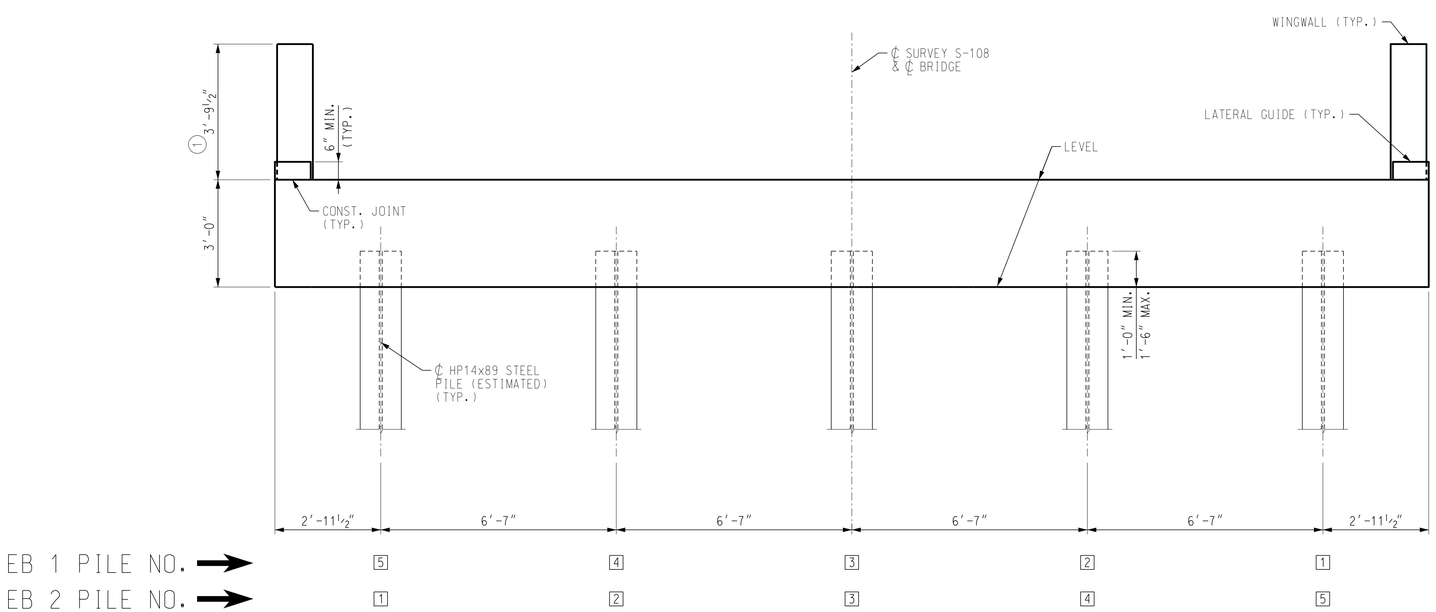


## ELEVATION

(LOOKING IN OPPOSITE DIRECTION OF STATIONING)
(END BENT 1 SHOWN, END BENT 2 SIMILAR)

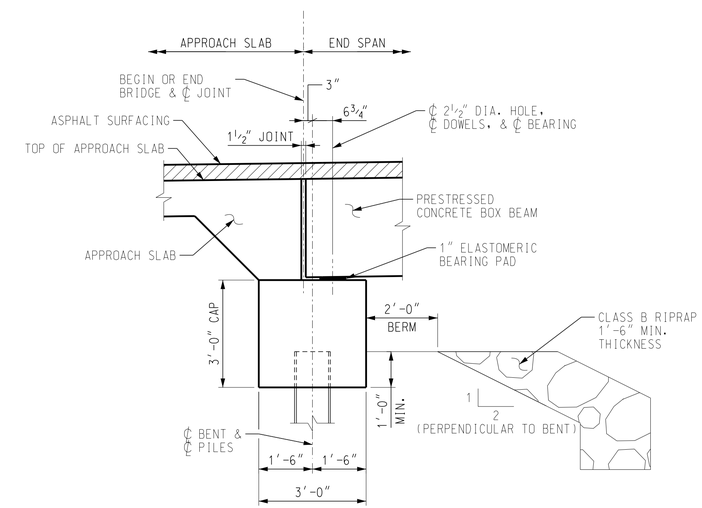


## SECTION THRU END BENT

LEGEND:

(1) - WINGWALL HEIGHT MEASURED AT BEGIN BRIDGE OR END BRIDGE. WINGWALL HEIGHT VARIES WITH ROADWAY PROFILE.

PLANS PREPARED BY:

HOLT CONSULTING COMPANY, LLC
2801 DEVINE STREET, SUITE 201
COLUMBIA, SC 29205
(803) 771-4658

HOLT CONSULTING COMPANY, LLC.

SOUTH CAROLINA
DEPARTMENT OF TRANSPORTATION

CONCEPTUAL PLANS NOT FOR CONSTRUCTION

| | | | |
|---|---|---|---|
| REV. | | | |
| REV. | | | |
| REV. | | | |
| REVIEWED | | | |
| QUAN. | | | |
| DR. | WST | CGB | 01/23 |
| DES. | CGB | WST | 01/23 |
| | BY | CHK. | DATE |

# END BENTS 1 & 2
# PLAN AND ELEVATION

| COUNTY | ROUTE |
|---|---|
| CHESTERFIELD | S-108 |

1/31/2023

| BRIDGE PLANS ID | SHEET NO. |
|---|---|
| P041181-B01 | 3 |

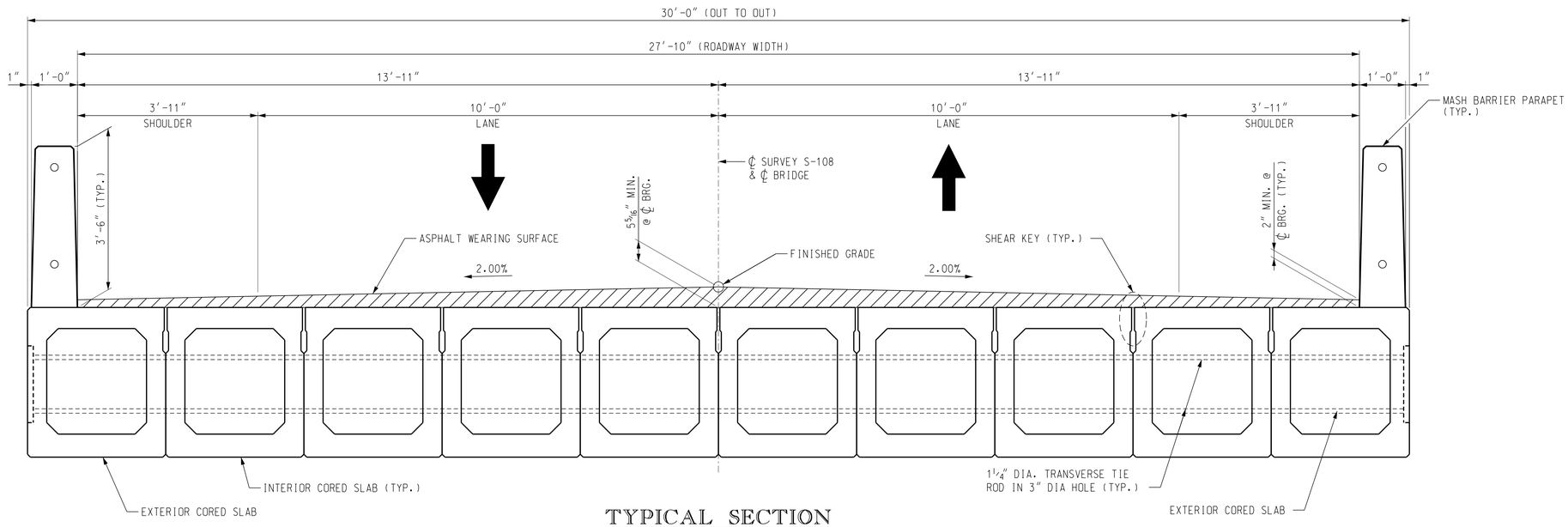


## TYPICAL SECTION

(LOOKING IN THE DIRECTION OF STATIONING)

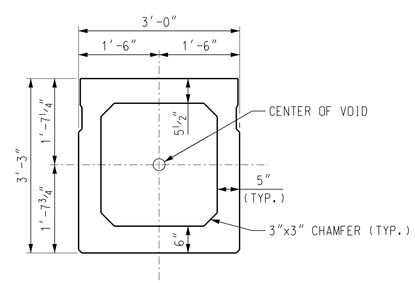


## INTERIOR SLAB SECTION

CONCEPTUAL PLANS NOT FOR CONSTRUCTION

| | | | |
|---|---|---|---|
| REV. | | | |
| REV. | | | |
| REV. | | | |
| REVIEWED | | | |
| QUAN. | | | |
| DR. | WST | CGB | 01/23 |
| DES. | CGB | WST | 01/23 |
| | BY | CHK. | DATE |

PLANS PREPARED BY:

HOLT CONSULTING COMPANY, LLC
2801 DEVINE STREET, SUITE 201
COLUMBIA, SC 29205
(803) 771-4658

HOLT CONSULTING COMPANY, LLC.

SOUTH CAROLINA
DEPARTMENT OF TRANSPORTATION

TYPICAL SECTION

| COUNTY | ROUTE |
|---|---|
| CHESTERFIELD | S-108 |

1/31/2023

BR01_041156_BP01.dgn

| BRIDGE PLANS ID | SHEET NO. |
|---|---|
| P041156-B01 | 1 |

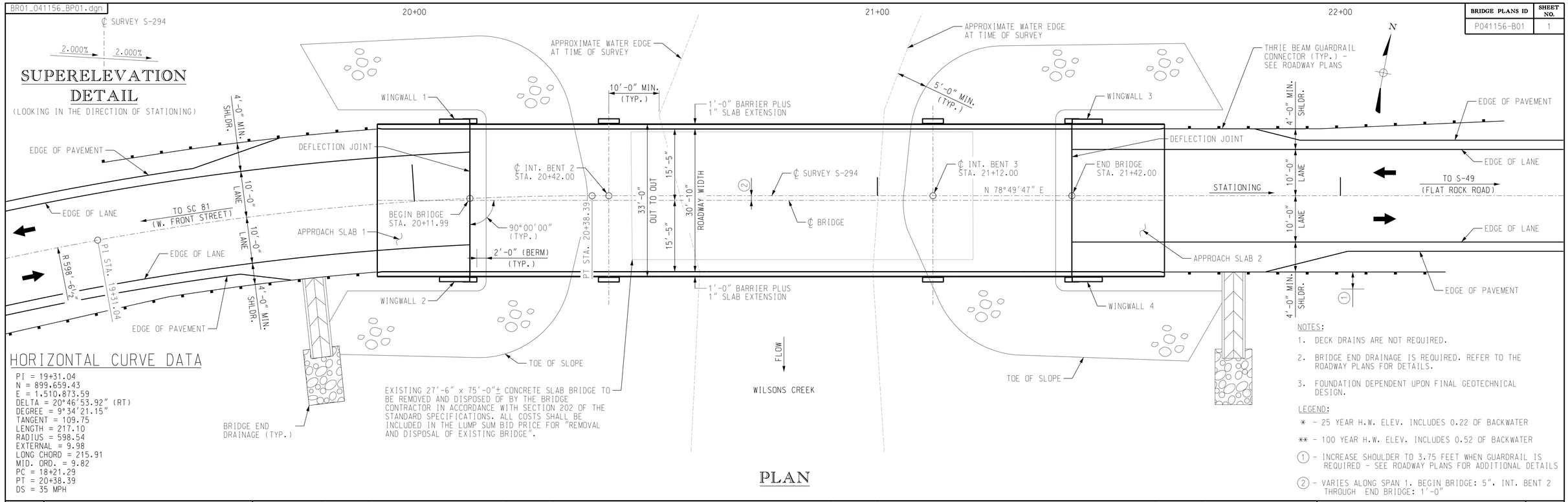


## HORIZONTAL CURVE DATA

PI = 19+31.04
N = 899,659.43
E = 1,510,873.59
DELTA = 20°46'53.92" (RT)
DEGREE = 9°34'21.15"
TANGENT = 109.75
LENGTH = 217.10
RADIUS = 598.54
EXTERNAL = 9.98
LONG CHORD = 215.91
MID. ORD. = 9.82
PC = 18+21.29
PT = 20+38.39
DS = 35 MPH

## PLAN

NOTES:

1. DECK DRAINS ARE NOT REQUIRED.
2. BRIDGE END DRAINAGE IS REQUIRED. REFER TO THE ROADWAY PLANS FOR DETAILS.
3. FOUNDATION DEPENDENT UPON FINAL GEOTECHNICAL DESIGN.

LEGEND:

* - 25 YEAR H.W. ELEV. INCLUDES 0.22 OF BACKWATER

** - 100 YEAR H.W. ELEV. INCLUDES 0.52 OF BACKWATER

(1) - INCREASE SHOULDER TO 3.75 FEET WHEN GUARDRAIL IS REQUIRED - SEE ROADWAY PLANS FOR ADDITIONAL DETAILS

(2) - VARIES ALONG SPAN 1. BEGIN BRIDGE: 5", INT. BENT 2 THROUGH END BRIDGE: 1'-0"

## VERTICAL CURVE 1 DATA

P.I. STATION (FT) : 20+33.80
P.I. ELEVATION : 535.328
CURVE LENGTH (FT) : 105.0'
g1 in % : +2.933%
g2 out % : -0.300%

## VERTICAL CURVE 2 DATA

P.I. STATION (FT) : 23+27.79
P.I. ELEVATION : 534.446
CURVE LENGTH (FT) : 340.0'
g1 in % : -0.300%
g2 out % : +7.700%

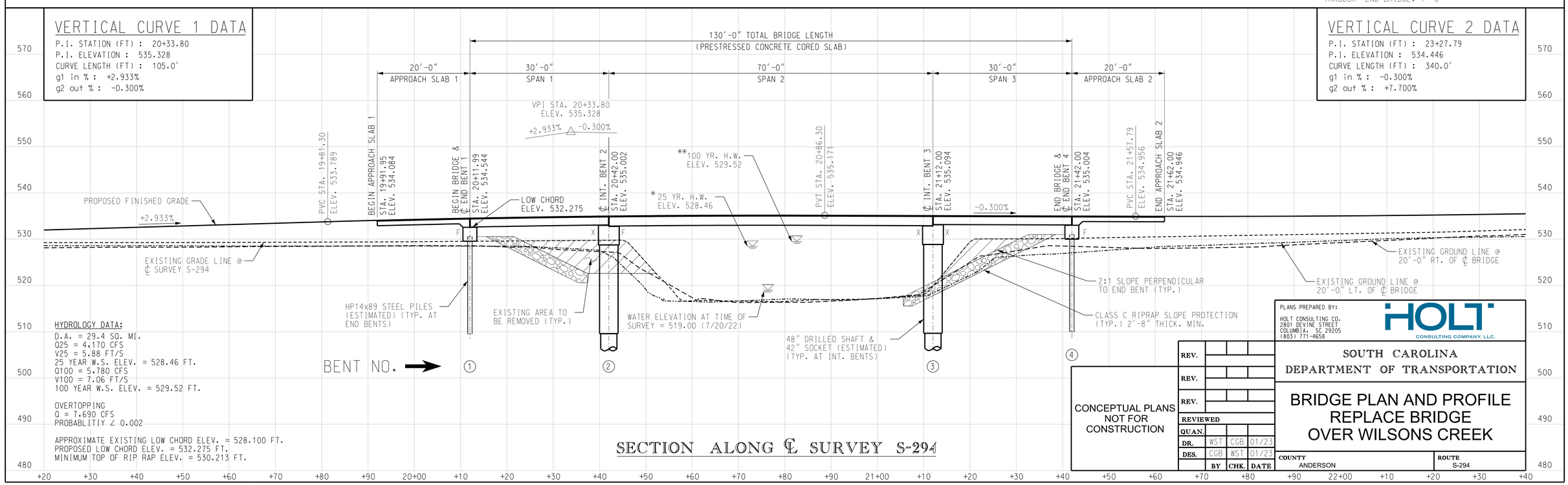


## HYDROLOGY DATA:

D.A. = 29.4 SQ. MI.
Q25 = 4,170 CFS
V25 = 5.88 FT/S
25 YEAR W.S. ELEV. = 528.46 FT.
Q100 = 5,780 CFS
V100 = 7.06 FT/S
100 YEAR W.S. ELEV. = 529.52 FT.

OVERTOPPING
Q = 7,690 CFS
PROBABLITIY ∠ 0.002

APPROXIMATE EXISTING LOW CHORD ELEV. = 528.100 FT.
PROPOSED LOW CHORD ELEV. = 532.275 FT.
MINIMUM TOP OF RIP RAP ELEV. = 530.213 FT.

## SECTION ALONG ℄ SURVEY S-294

CONCEPTUAL PLANS NOT FOR CONSTRUCTION

| | | | |
|---|---|---|---|
| REV. | | | |
| REV. | | | |
| REV. | | | |
| REVIEWED | | | |
| QUAN. | | | |
| DR. | WST | CGB | 01/23 |
| DES. | CGB | WST | 01/23 |
| | BY | CHK. | DATE |


PLANS PREPARED BY:
HOLT CONSULTING CO.
2801 DEVINE STREET
COLUMBIA, SC 29205
(803) 771-4658
HOLT CONSULTING COMPANY, LLC.


SOUTH CAROLINA
DEPARTMENT OF TRANSPORTATION

# BRIDGE PLAN AND PROFILE REPLACE BRIDGE OVER WILSONS CREEK

| COUNTY | ROUTE |
|---|---|
| ANDERSON | S-294 |

1/31/2023

BR01_041156_EB_01.dgn

| BRIDGE PLANS ID | SHEET NO. |
|---|---|
| P041156-B01 | 2 |

LEGEND:

1 - END BENT 1: 5"
END BENT 4: 1'-0"

2 - FOR END BENT 4 ℄ SURVEY S-294 ORIENTATION, SEE SHEET 1

3 - WINGWALL HEIGHT MEASURED AT BEGIN BRIDGE OR END BRIDGE. WINGWALL HEIGHT VARIES WITH ROADWAY PROFILE.

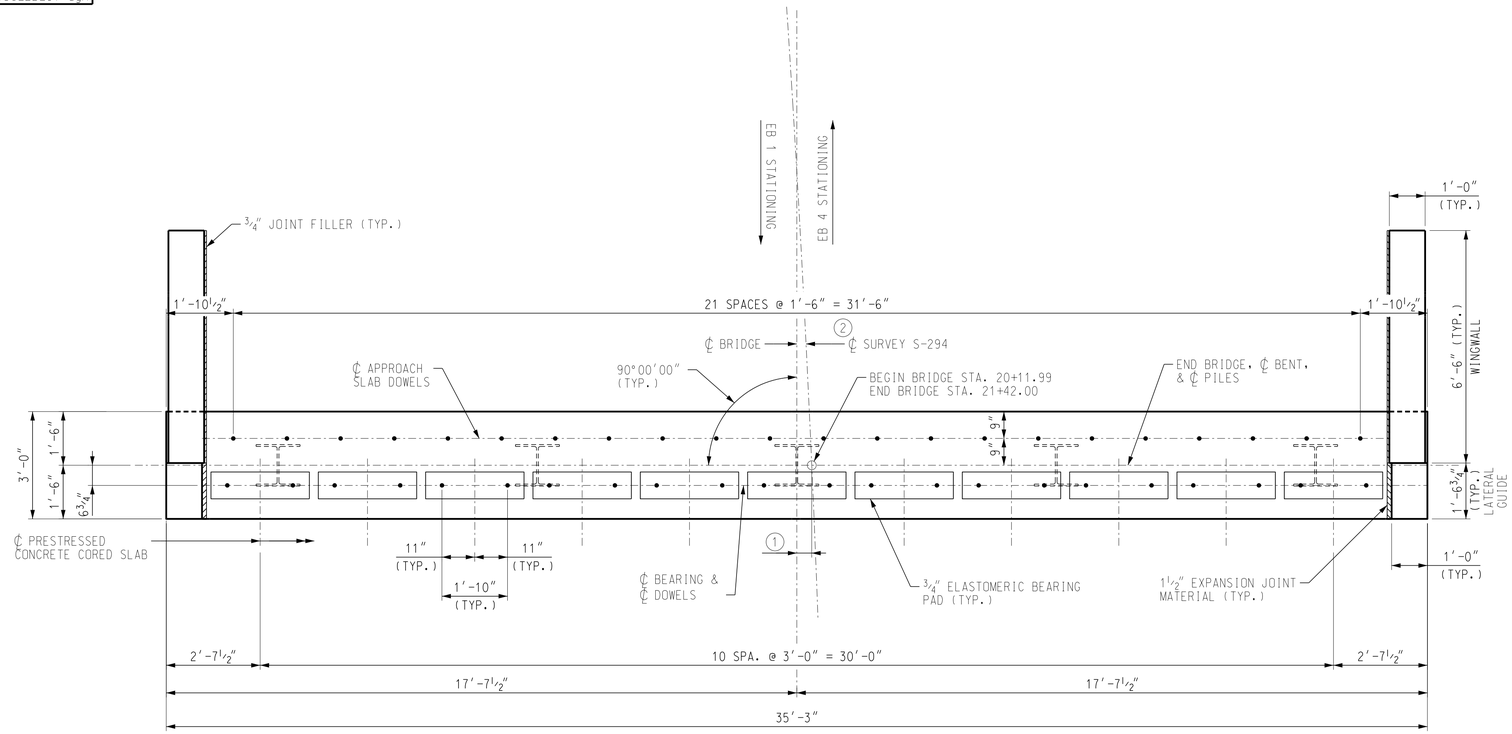


PLAN

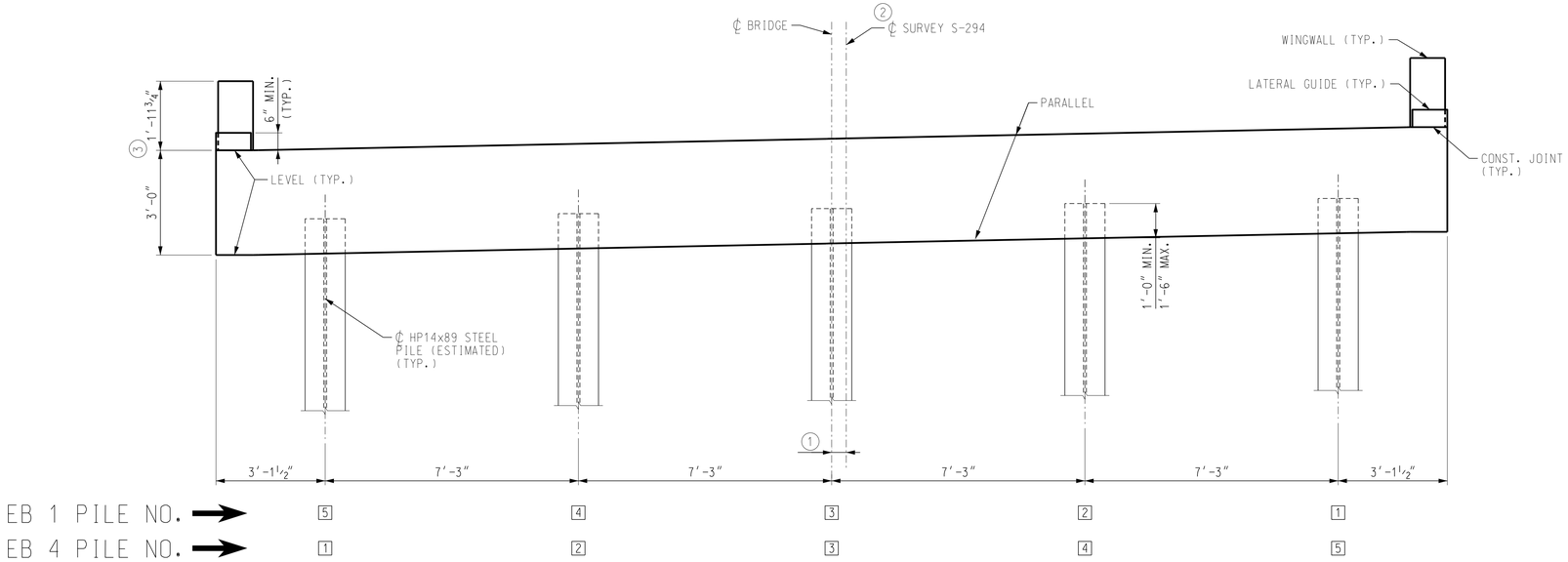


ELEVATION

(LOOKING IN OPPOSITE DIRECTION OF STATIONING)
(END BENT 1 SHOWN, END BENT 4 SIMILAR)

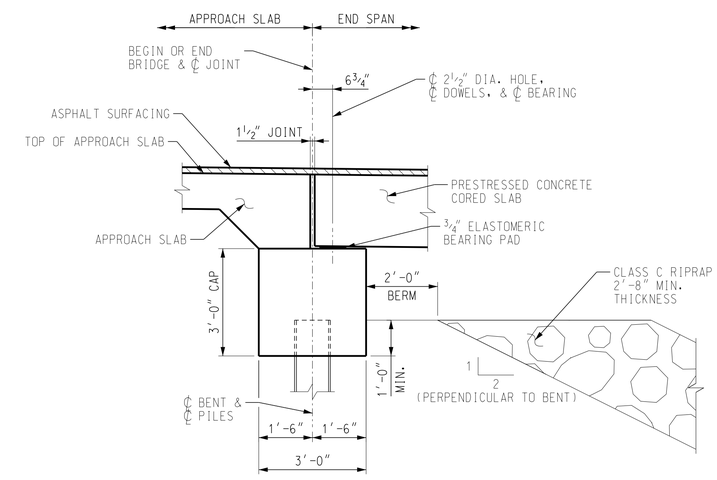


SECTION THRU END BENT

PLANS PREPARED BY:

HOLT CONSULTING COMPANY, LLC
2801 DEVINE STREET, SUITE 201
COLUMBIA, SC 29205
(803) 771-4658

HOLT CONSULTING COMPANY, LLC.

SOUTH CAROLINA
DEPARTMENT OF TRANSPORTATION

CONCEPTUAL PLANS NOT FOR CONSTRUCTION

| | BY | CHK. | DATE |
|---|---|---|---|
| REV. | | | |
| REV. | | | |
| REV. | | | |
| REVIEWED | | | |
| QUAN. | | | |
| DR. | WST | CGB | 01/23 |
| DES. | CGB | WST | 01/23 |

# END BENTS 1 & 4 PLAN AND ELEVATION

| COUNTY | ROUTE |
|---|---|
| ANDERSON | S-294 |

1/31/2023

BR01_041156_BT_01.dgn

| BRIDGE PLANS ID | SHEET NO. |
|---|---|
| P041156-B01 | 3 |

LEGEND:

(1) - INT. BENT 2, SPAN 1: $2\frac{7}{8}''$
INT. BENT 3, SPAN 3: $3''$

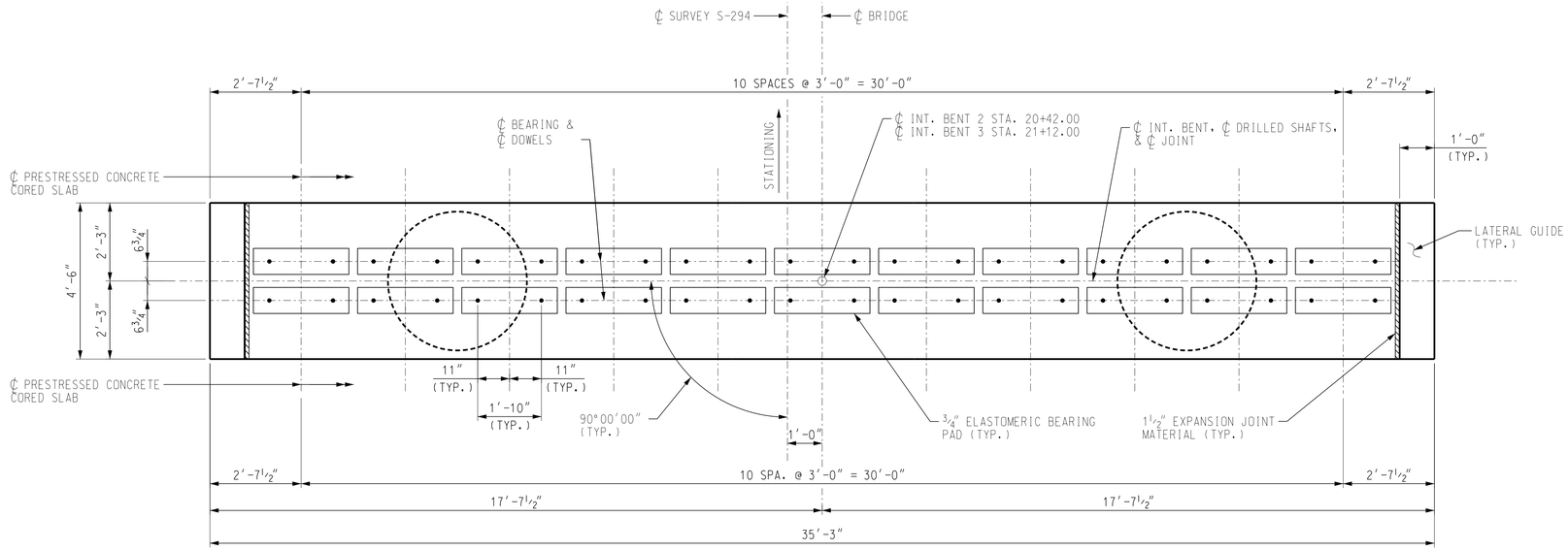


PLAN

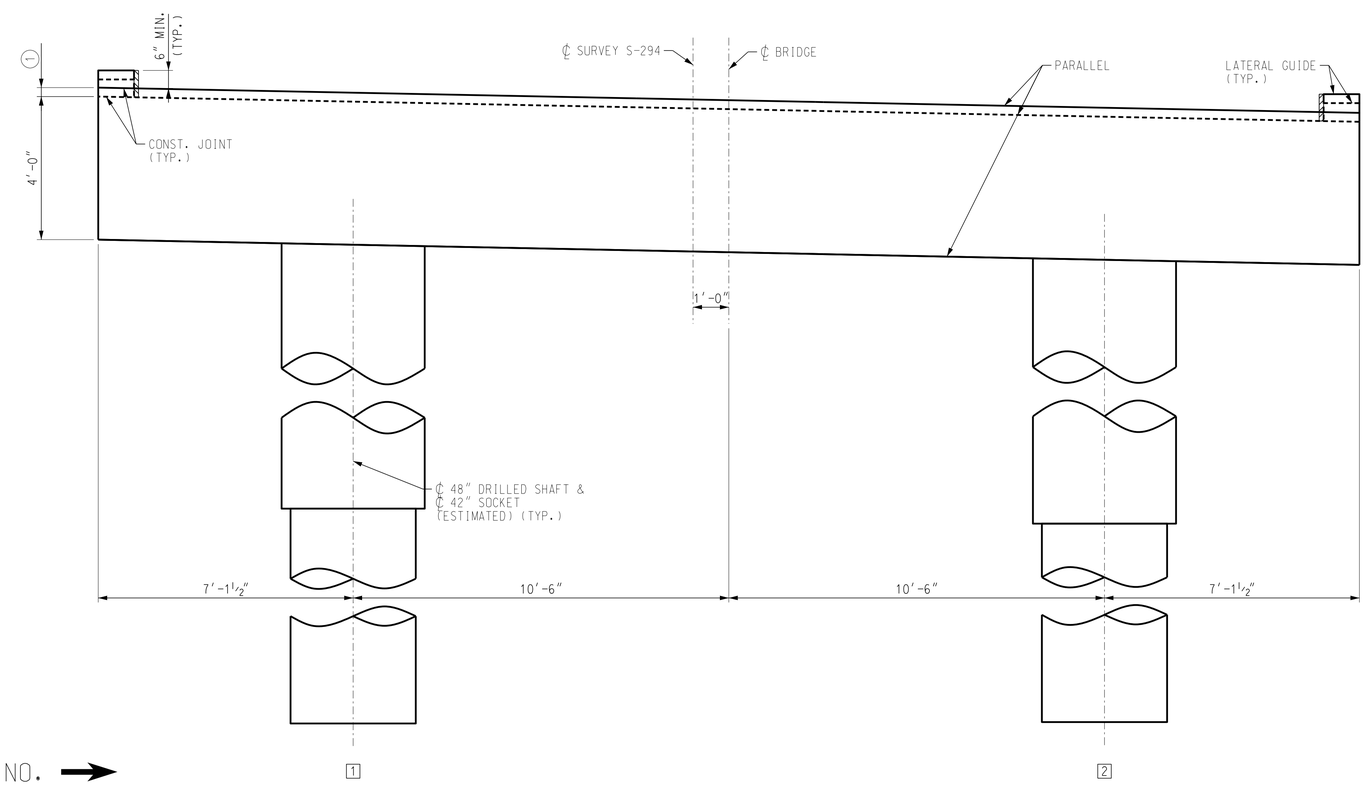


SHAFT NO. →
DRILLED SHAFTS ARE NUMBERED FROM LEFT TO RIGHT LOOKING IN DIRECTON OF STATIONING

ELEVATION

(LOOKING IN DIRECTION OF STATIONING)
(INTERIOR BENT 2 SHOWN, INTERIOR BENT 3 SIMILAR)

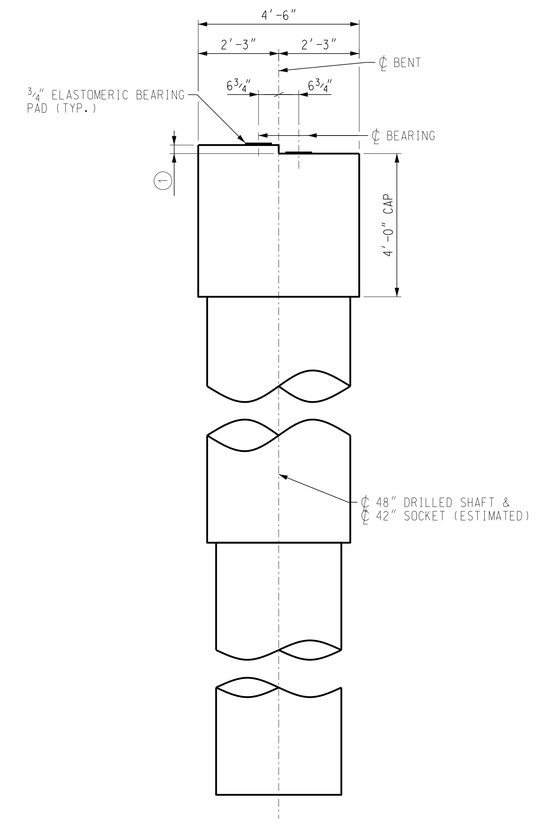


SECTION THRU INT. BENT

PLANS PREPARED BY:
HOLT CONSULTING COMPANY, LLC
2801 DEVINE STREET, SUITE 201
COLUMBIA, SC 29205
(803) 771-4658

HOLT CONSULTING COMPANY, LLC.

SOUTH CAROLINA
DEPARTMENT OF TRANSPORTATION

CONCEPTUAL PLANS NOT FOR CONSTRUCTION

| | | | |
|---|---|---|---|
| REV. | | | |
| REV. | | | |
| REV. | | | |
| REVIEWED | | | |
| QUAN. | | | |
| DR. | WST | CGB | 01/23 |
| DES. | CGB | WST | 01/23 |
| | BY | CHK. | DATE |

# INTERIOR BENTS 2 & 3 PLAN AND ELEVATION

| COUNTY | ROUTE |
|---|---|
| ANDERSON | S-294 |

1/31/2023

BR01_041156_SX_01.dgn

| BRIDGE PLANS ID | SHEET NO. |
|---|---|
| P041156-BR01 | 4 |

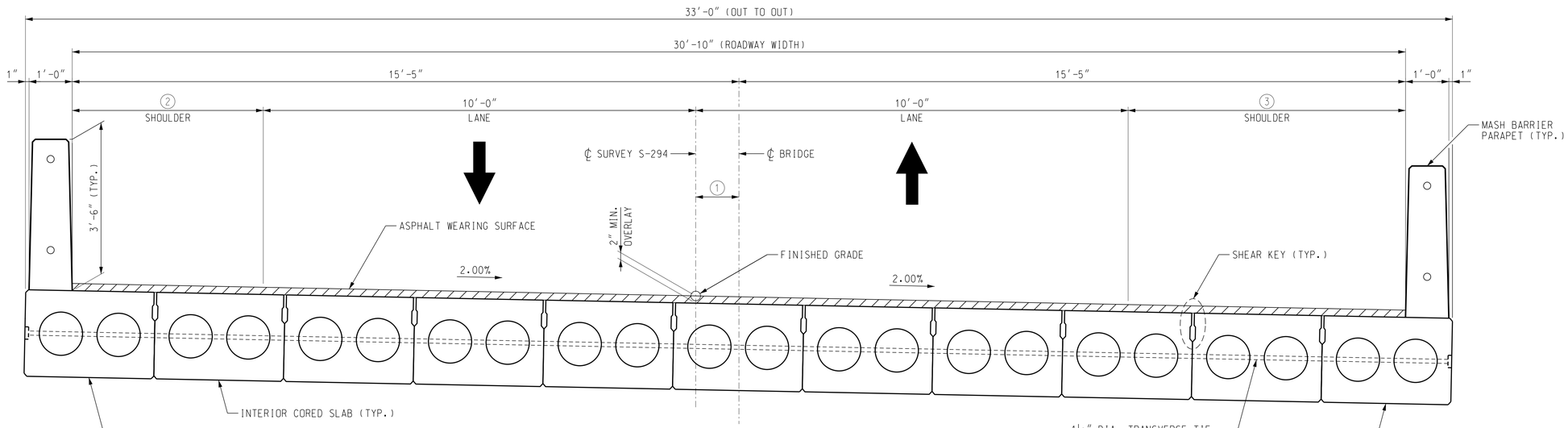


## TYPICAL SECTION

(LOOKING IN THE DIRECTION OF STATIONING)

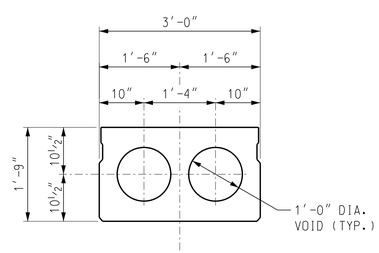


## INTERIOR SLAB SECTION SPANS 1 & 3

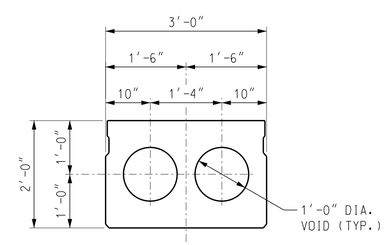


## INTERIOR SLAB SECTION SPAN 2

LEGEND:

1 - VARIES ALONG SPAN 1. BEGIN BRIDGE 5", INT. BENT 2 THROUGH END BRIDGE 1'-0"

2 - LEFT SHOULDER: VARIES ALONG SPAN 1. BEGIN BRIDGE 5'-0", INT. BENT 2 THROUGH END BRIDGE 4'-5". DIMENSIONS MEASURED PERPINDICULAR TO ℄ SURVEY S-294.

3 - RIGHT SHOULDER: VARIES ALONG SPAN 1. BEGIN BRIDGE 5'-10", INT. BENT 2 THROUGH END BRIDGE 6'-5". DIMENSIONS MEASURED PERPINDICULAR TO ℄ SURVEY S-294.


PLANS PREPARED BY:

HOLT CONSULTING COMPANY, LLC
2801 DEVINE STREET, SUITE 201
COLUMBIA, SC 29205
(803) 771-4658


CONCEPTUAL PLANS NOT FOR CONSTRUCTION

| | | | |
|---|---|---|---|
| REV. | | | |
| REV. | | | |
| REV. | | | |
| REVIEWED | | | |
| QUAN. | | | |
| DR. | WST | CGB | 01/23 |
| DES. | CGB | WST | 01/23 |
| | BY | CHK. | DATE |

SOUTH CAROLINA
DEPARTMENT OF TRANSPORTATION

TYPICAL SECTION

| COUNTY | ROUTE |
|---|---|
| ANDERSON | S-294 |

1/31/2023

BR01_041154_BP01.dgn

| BRIDGE PLANS ID | SHEET NO. |
|---|---|
| P041154-B01 | 1 |

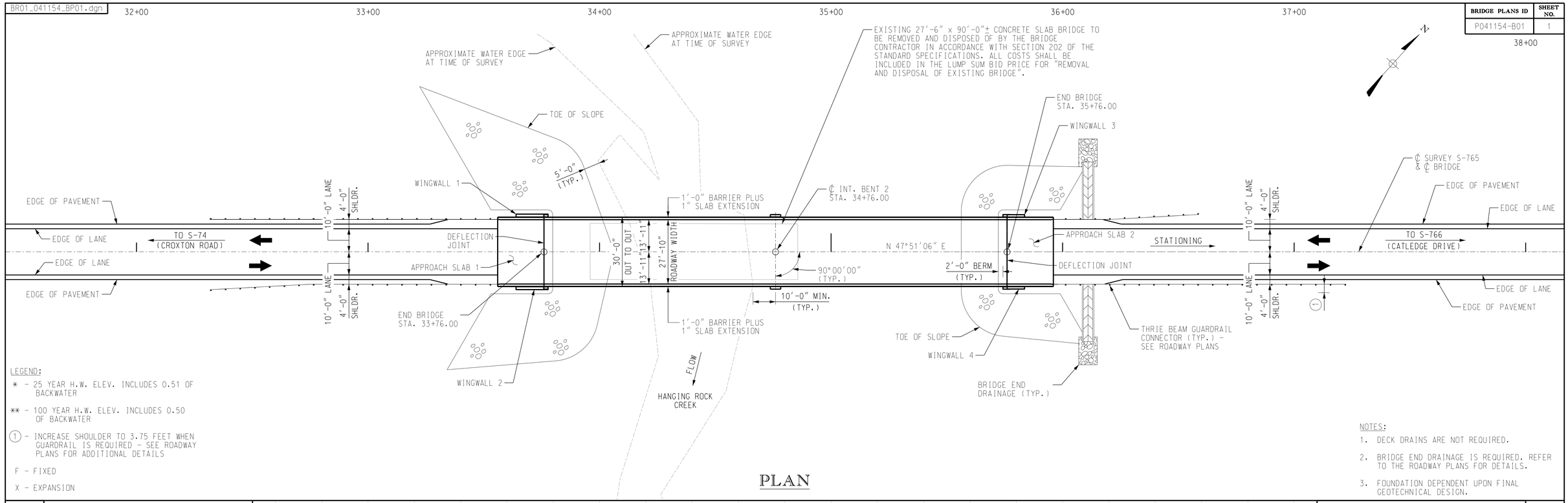


LEGEND:

* - 25 YEAR H.W. ELEV. INCLUDES 0.51 OF BACKWATER

** - 100 YEAR H.W. ELEV. INCLUDES 0.50 OF BACKWATER

(1) - INCREASE SHOULDER TO 3.75 FEET WHEN GUARDRAIL IS REQUIRED - SEE ROADWAY PLANS FOR ADDITIONAL DETAILS

F - FIXED

X - EXPANSION

## PLAN

NOTES:

1. DECK DRAINS ARE NOT REQUIRED.
2. BRIDGE END DRAINAGE IS REQUIRED. REFER TO THE ROADWAY PLANS FOR DETAILS.
3. FOUNDATION DEPENDENT UPON FINAL GEOTECHNICAL DESIGN.

### VERTICAL CURVE 1 DATA

P.I. STATION(FT) : 33+11.77
P.I. ELEVATION : 402.166
CURVE LENGTH (FT) : 125.0'
g1 in % : -6.500%
g2 out % : -4.178%

### VERTICAL CURVE 2 DATA

P.I. STATION (FT) : 37+58.53
P.I. ELEVATION : 383.500
CURVE LENGTH (FT) : 200.0'
g1 in % : -4.178%
g2 out % : +0.062%

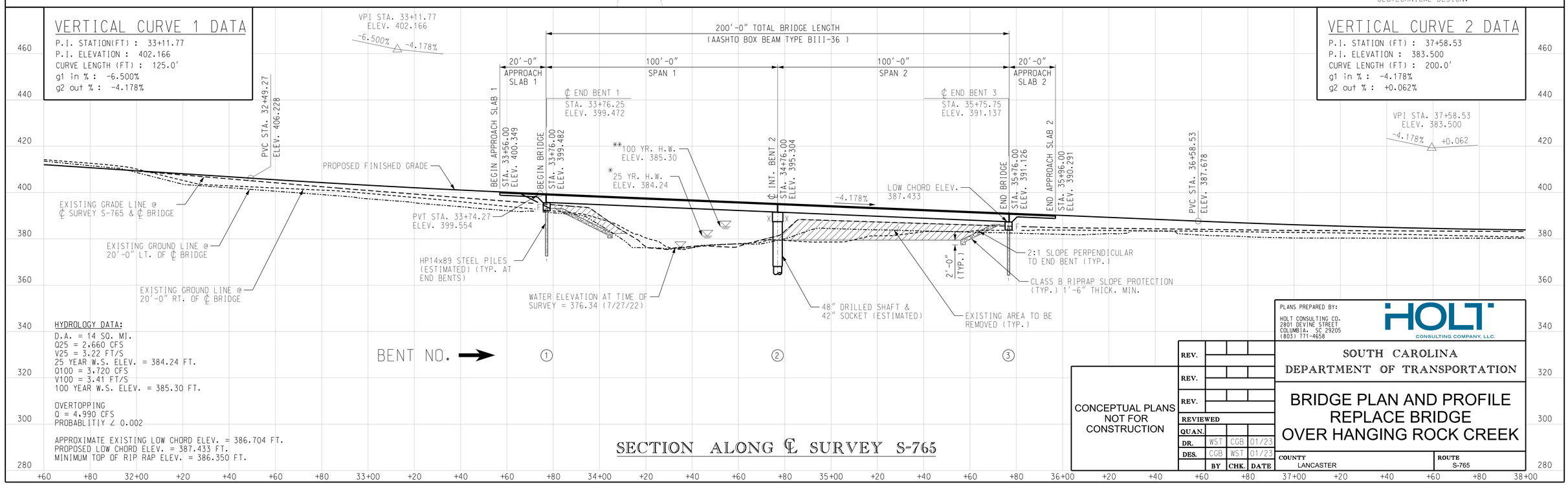


HYDROLOGY DATA:

D.A. = 14 SQ. MI.
Q25 = 2,660 CFS
V25 = 3.22 FT/S
25 YEAR W.S. ELEV. = 384.24 FT.
Q100 = 3,720 CFS
V100 = 3.41 FT/S
100 YEAR W.S. ELEV. = 385.30 FT.

OVERTOPPING
Q = 4,990 CFS
PROBABLITIY ∠ 0.002

APPROXIMATE EXISTING LOW CHORD ELEV. = 386.704 FT.
PROPOSED LOW CHORD ELEV. = 387.433 FT.
MINIMUM TOP OF RIP RAP ELEV. = 386.350 FT.

## SECTION ALONG ℄ SURVEY S-765

CONCEPTUAL PLANS NOT FOR CONSTRUCTION

| | | | |
|---|---|---|---|
| REV. | | | |
| REV. | | | |
| REV. | | | |
| REVIEWED | | | |
| QUAN. | | | |
| DR. | WST | CGB | 01/23 |
| DES. | CGB | WST | 01/23 |
| | BY | CHK. | DATE |


PLANS PREPARED BY:
HOLT CONSULTING CO.
2801 DEVINE STREET
COLUMBIA, SC 29205
(803) 771-4658
HOLT CONSULTING COMPANY, LLC.


SOUTH CAROLINA DEPARTMENT OF TRANSPORTATION

# BRIDGE PLAN AND PROFILE REPLACE BRIDGE OVER HANGING ROCK CREEK

COUNTY: LANCASTER
ROUTE: S-765

1/31/2023

BR01_041154_EB_01.dgn

| BRIDGE PLANS ID | SHEET NO. |
|---|---|
| P041154-B01 | 2 |

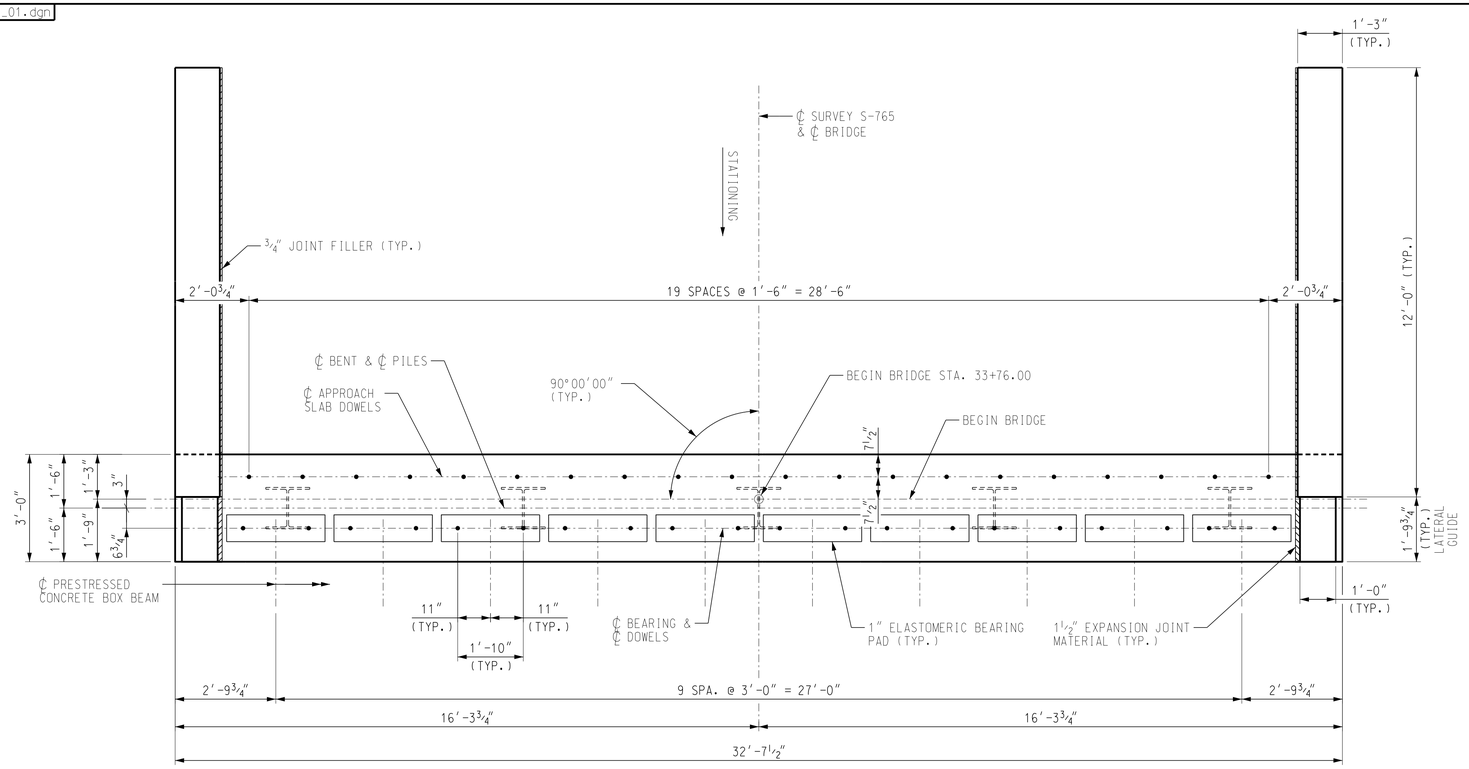


## PLAN

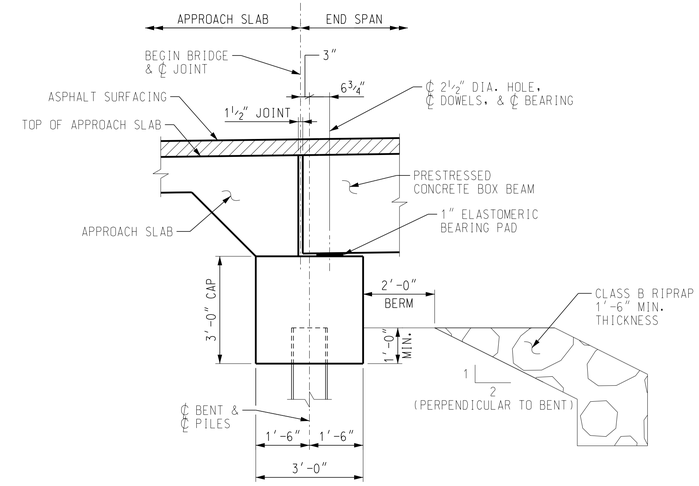


## SECTION THRU END BENT

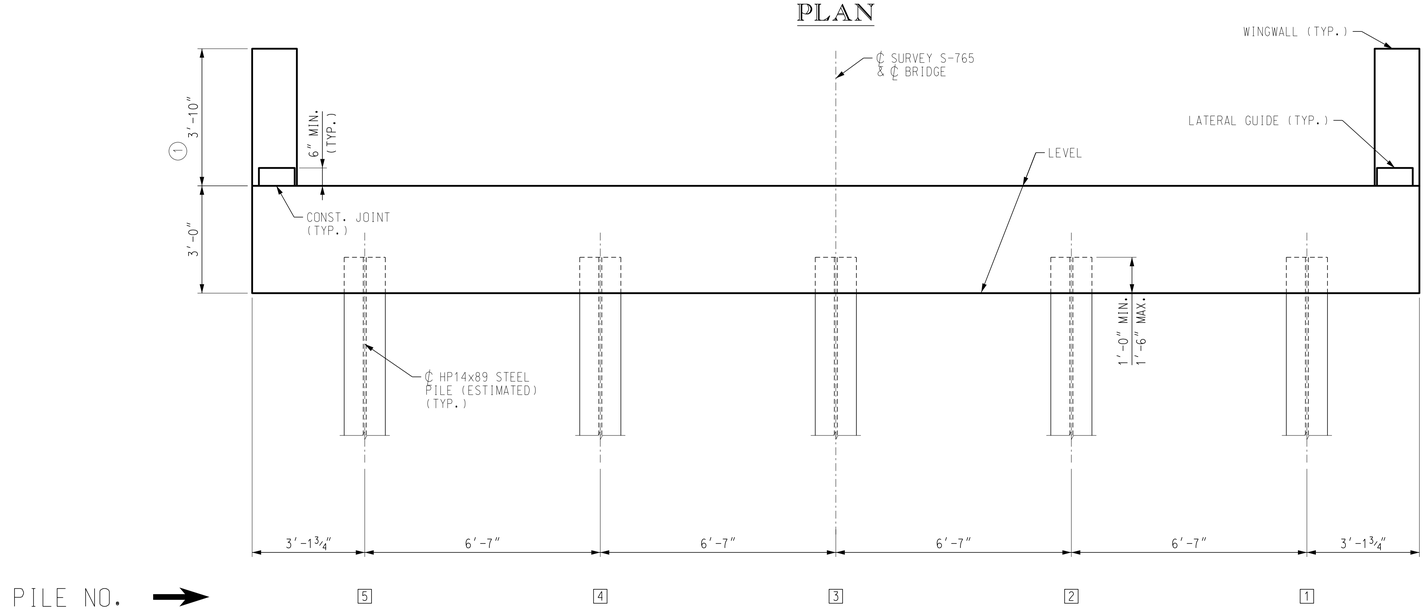


## ELEVATION

(LOOKING IN OPPOSITE DIRECTION OF STATIONING)

LEGEND:

1 - WINGWALL HEIGHT MEASURED AT BEGIN BRIDGE OR END BRIDGE. WINGWALL HEIGHT VARIES WITH ROADWAY PROFILE.

CONCEPTUAL PLANS NOT FOR CONSTRUCTION

| | | | |
|---|---|---|---|
| REV. | | | |
| REV. | | | |
| REV. | | | |
| REVIEWED | | | |
| QUAN. | | | |
| DR. | WST | CGB | 01/23 |
| DES. | CGB | WST | 01/23 |
| | BY | CHK. | DATE |


PLANS PREPARED BY:
HOLT CONSULTING COMPANY, LLC
2801 DEVINE STREET, SUITE 201
COLUMBIA, SC 29205
(803) 771-4658


SOUTH CAROLINA
DEPARTMENT OF TRANSPORTATION

# END BENTS 1 PLAN AND ELEVATION

| COUNTY | ROUTE |
|---|---|
| LANCASTER | S-765 |

1/31/2023

BR01_041154_EB_02.dgn

| BRIDGE PLANS ID | SHEET NO. |
|---|---|
| P041154-B01 | 3 |

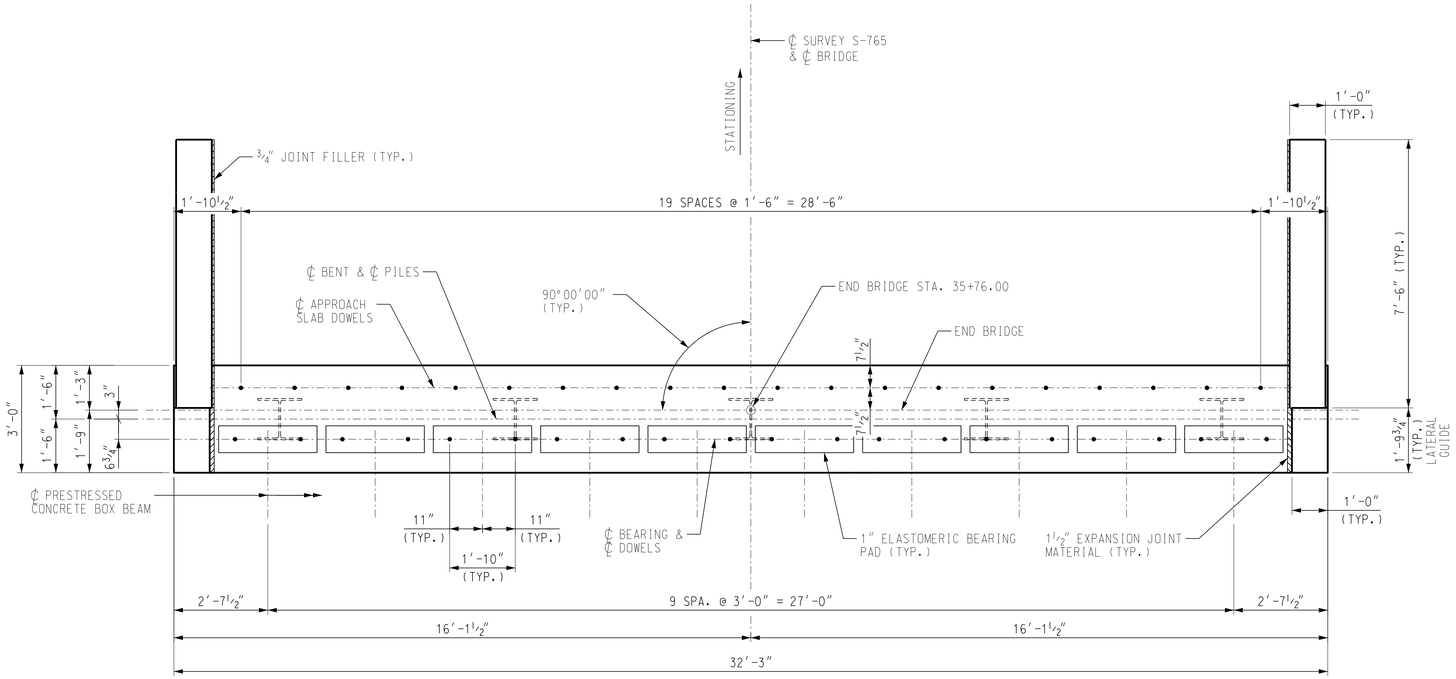


## PLAN

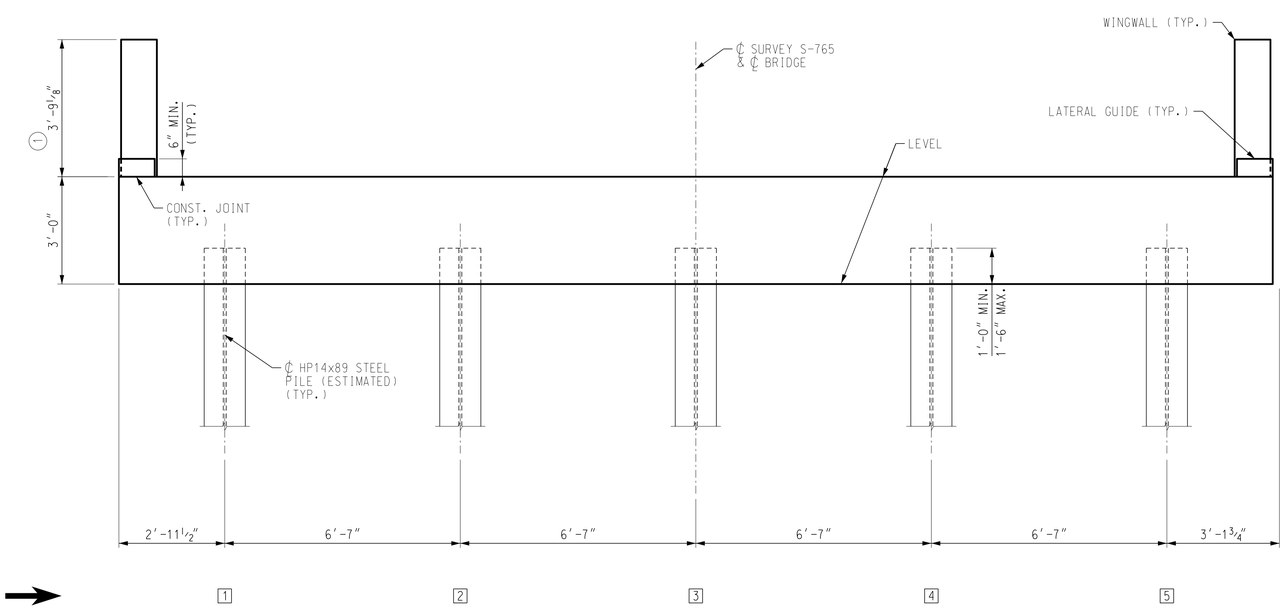


## ELEVATION

(LOOKING IN DIRECTION OF STATIONING)

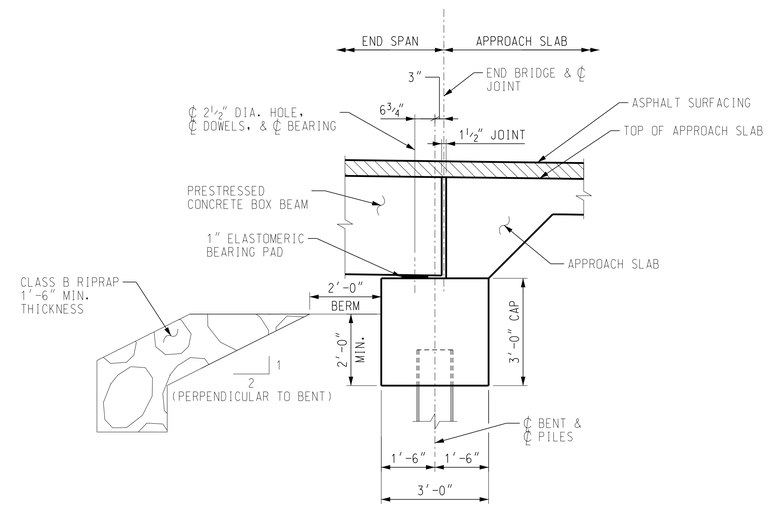


## SECTION THRU END BENT

LEGEND:

1 - WINGWALL HEIGHT MEASURED AT BEGIN BRIDGE OR END BRIDGE. WINGWALL HEIGHT VARIES WITH ROADWAY PROFILE.

CONCEPTUAL PLANS NOT FOR CONSTRUCTION

| | | | |
|---|---|---|---|
| REV. | | | |
| REV. | | | |
| REV. | | | |
| REVIEWED | | | |
| QUAN. | | | |
| DR. | WST | CGB | 01/23 |
| DES. | CGB | WST | 01/23 |
| | BY | CHK. | DATE |

PLANS PREPARED BY:

HOLT CONSULTING COMPANY, LLC
2801 DEVINE STREET, SUITE 201
COLUMBIA, SC 29205
(803) 771-4658

HOLT CONSULTING COMPANY, LLC.

SOUTH CAROLINA
DEPARTMENT OF TRANSPORTATION

# END BENTS 3
# PLAN AND ELEVATION

| COUNTY | ROUTE |
|---|---|
| LANCASTER | S-765 |

1/31/2023

BR01_041154_BT_01.dgn

| BRIDGE PLANS ID | SHEET NO. |
|---|---|
| P041154-B01 | 4 |

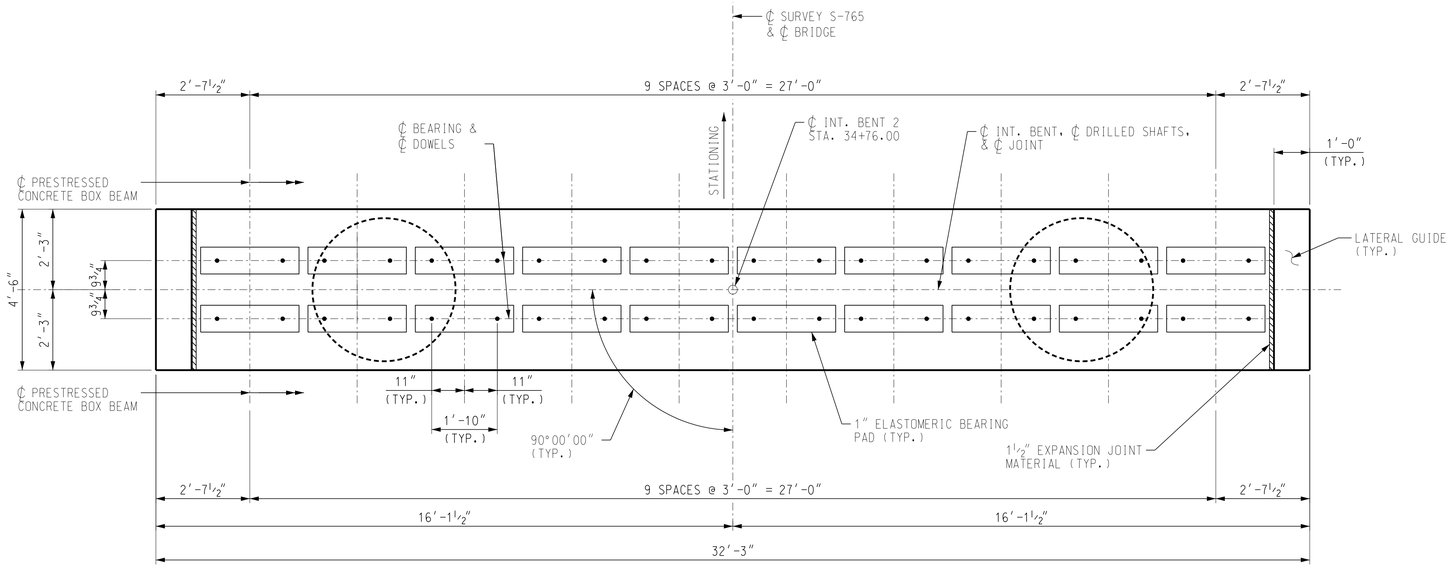


PLAN

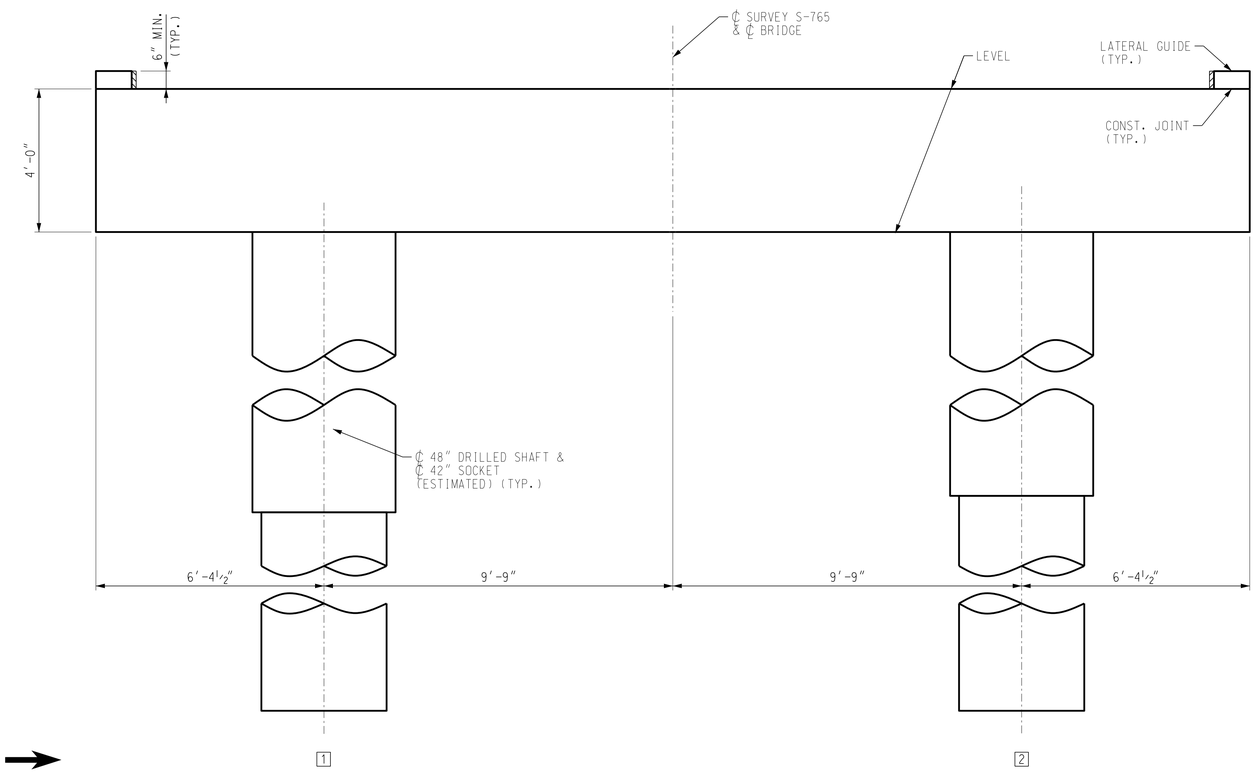


ELEVATION

(LOOKING IN DIRECTION OF STATIONING)

SHAFT NO. →

DRILLED SHAFTS ARE NUMBERED FROM LEFT TO RIGHT LOOKING IN DIRECTON OF STATIONING

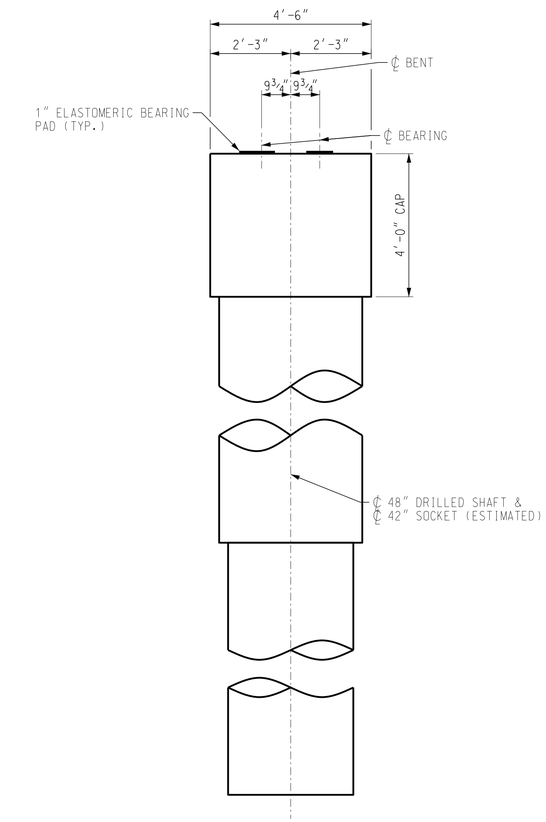


SECTION THRU INT. BENT

CONCEPTUAL PLANS NOT FOR CONSTRUCTION

| | | | |
|---|---|---|---|
| REV. | | | |
| REV. | | | |
| REV. | | | |
| REVIEWED | | | |
| QUAN. | | | |
| DR. | WST | CGB | 01/23 |
| DES. | CGB | WST | 01/23 |
| | BY | CHK. | DATE |

PLANS PREPARED BY:

HOLT CONSULTING COMPANY, LLC
2801 DEVINE STREET, SUITE 201
COLUMBIA, SC 29205
(803) 771-4658

HOLT CONSULTING COMPANY, LLC.

SOUTH CAROLINA
DEPARTMENT OF TRANSPORTATION

INTERIOR BENT 2
PLAN AND ELEVATION

| COUNTY | ROUTE |
|---|---|
| LANCASTER | S-765 |

1/31/2023

BR01_041154_SX_01.dgn

| BRIDGE PLANS ID | SHEET NO. |
|---|---|
| P041154-B01 | 5 |

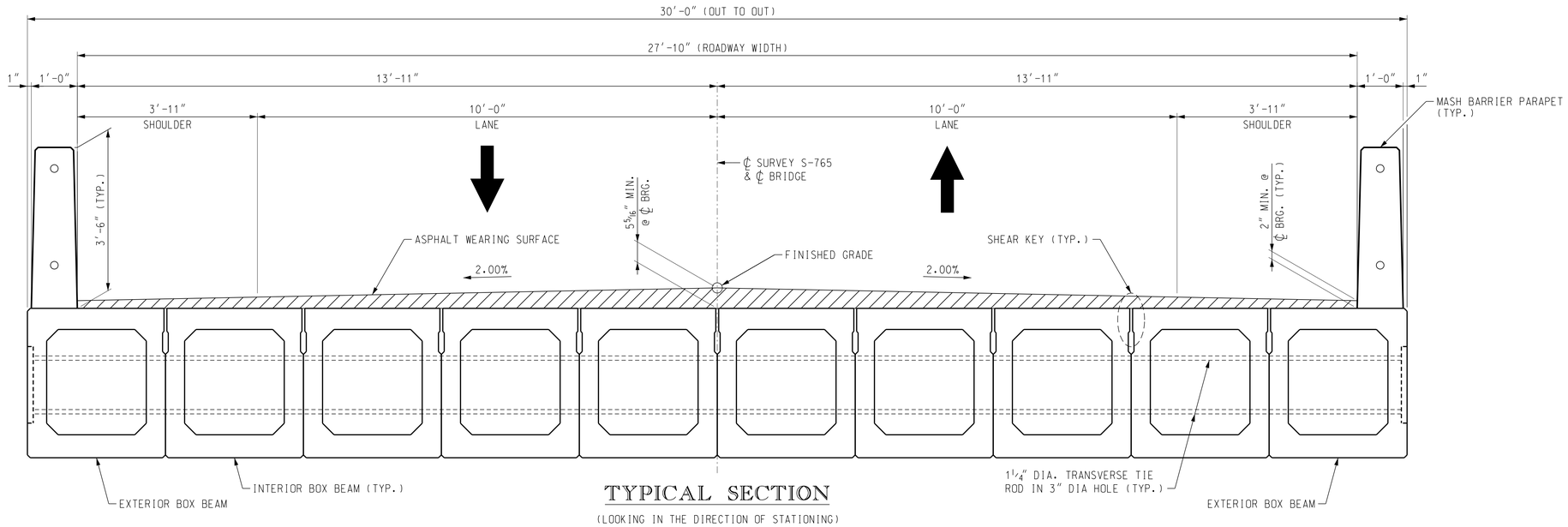


## TYPICAL SECTION

(LOOKING IN THE DIRECTION OF STATIONING)

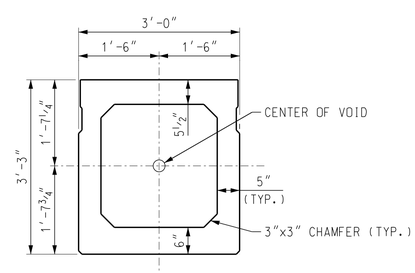


## INTERIOR BOX BEAM SECTION

CONCEPTUAL PLANS NOT FOR CONSTRUCTION

| | BY | CHK. | DATE |
|---|---|---|---|
| REV. | | | |
| REV. | | | |
| REV. | | | |
| REVIEWED | | | |
| QUAN. | | | |
| DR. | WST | CGB | 01/23 |
| DES. | CGB | WST | 01/23 |

PLANS PREPARED BY:

HOLT CONSULTING COMPANY, LLC
2801 DEVINE STREET, SUITE 201
COLUMBIA, SC 29205
(803) 771-4658

HOLT CONSULTING COMPANY, LLC.

SOUTH CAROLINA
DEPARTMENT OF TRANSPORTATION

TYPICAL SECTION

| COUNTY | ROUTE |
|---|---|
| LANCASTER | S-765 |

1/31/2023

# APPENDIX A.3

## CPM SCHEDULE

| ID | Task Mode | Task Name | Duration | Start | Finish | Predecessors |
|---|---|---|---|---|---|---|
| 1 | | Bid Opening | 0 days | Tue 3/7/23 | Tue 3/7/23 | |
| 2 | | | | | | |
| 3 | | Anticipated Notice of Award | 0 days | Mon 4/10/23 | Mon 4/10/23 | 1FS+25 days |
| 4 | | | | | | |
| 5 | | Anticipated Notice to Proceed | 0 days | Mon 5/1/23 | Mon 5/1/23 | |
| 6 | | | | | | |
| 7 | | **S-108 over Brown Creek** | **229 days** | **Tue 4/11/23** | **Fri 2/23/24** | |
| 8 | | **Design** | **100 days** | **Tue 4/11/23** | **Mon 8/28/23** | |
| 9 | | **Road and Hydro** | **25 days** | **Tue 4/11/23** | **Mon 5/15/23** | |
| 10 | | Design and Plan Production | 20 days | Tue 4/11/23 | Mon 5/8/23 | 3 |
| 11 | | Traffic Control Plan | 5 days | Tue 5/9/23 | Mon 5/15/23 | 10 |
| 12 | | Hydraulic Design, Modeling, and Reports | 25 days | Tue 4/11/23 | Mon 5/15/23 | 3 |
| 13 | | Geotech | 25 days | Tue 4/11/23 | Mon 5/15/23 | 3 |
| 14 | | Internal QC | 5 days | Tue 5/16/23 | Mon 5/22/23 | 10,11,12,13 |
| 15 | | Final Const. Submittal | 0 days | Mon 5/22/23 | Mon 5/22/23 | 14 |
| 16 | | SCDOT Review | 15 days | Tue 5/23/23 | Mon 6/12/23 | 15 |
| 17 | | Respond and Revise Plans | 5 days | Tue 6/13/23 | Mon 6/19/23 | 16 |
| 18 | | SCDOT Review | 5 days | Tue 6/20/23 | Mon 6/26/23 | 17 |
| 19 | | Submit RFC Plans | 0 days | Mon 6/26/23 | Mon 6/26/23 | 18 |
| 20 | | Permitting | 50 days | Tue 6/20/23 | Mon 8/28/23 | 17 |
| 21 | | ROW Acquistion | 50 days | Tue 6/13/23 | Mon 8/21/23 | 16 |
| 22 | | Utility Window | 30 days | Tue 6/13/23 | Mon 7/24/23 | 21SS |
| 23 | | **Construction** | **129 days** | **Tue 8/29/23** | **Fri 2/23/24** | |
| 24 | | Demo | 10 days | Tue 8/29/23 | Mon 9/11/23 | 20 |
| 25 | | **Bridge Construction** | **104 days** | **Tue 9/12/23** | **Fri 2/2/24** | |
| 26 | | Foundation Work | 33 days | Tue 9/12/23 | Thu 10/26/23 | 24 |
| 27 | | Substructure | 41 days | Fri 10/27/23 | Fri 12/22/23 | 26 |
| 28 | | Superstructure | 30 days | Mon 12/25/23 | Fri 2/2/24 | 27 |
| 29 | | Roadway Construction | 25 days | Mon 1/22/24 | Fri 2/23/24 | 28SS+20 days |
| 30 | | **BRIDGE OPEN** | 0 days | Fri 2/23/24 | Fri 2/23/24 | 29 |
| 31 | | | | | | |
| 32 | | **S-294 over Wilsons Creek** | **293 days** | **Tue 5/23/23** | **Thu 7/4/24** | |
| 33 | | **Design** | **175 days** | **Tue 5/23/23** | **Mon 1/22/24** | |
| 34 | | **Road and Hydro** | **50 days** | **Tue 5/23/23** | **Mon 7/31/23** | |
| 35 | | Design and Plan Production | 45 days | Tue 5/23/23 | Mon 7/24/23 | 15 |
| 36 | | Traffic Control Plan | 5 days | Tue 7/25/23 | Mon 7/31/23 | 35 |
| 37 | | Hydraulic Design, Modeling, and Reports | 50 days | Tue 5/23/23 | Mon 7/31/23 | 15 |
| 38 | | Geotech | 60 days | Tue 5/23/23 | Mon 8/14/23 | 15 |
| 39 | | Internal QC | 10 days | Tue 8/15/23 | Mon 8/28/23 | 35,36,37,38 |
| 40 | | Final Const. Submittal | 0 days | Mon 8/28/23 | Mon 8/28/23 | 39 |
| 41 | | SCDOT Review | 15 days | Tue 8/29/23 | Mon 9/18/23 | 40 |
| 42 | | Respond and Revise Plans | 5 days | Tue 9/19/23 | Mon 9/25/23 | 41 |
| 43 | | SCDOT Review | 5 days | Tue 9/26/23 | Mon 10/2/23 | 42 |
| 44 | | Submit RFC Plans | 0 days | Mon 10/2/23 | Mon 10/2/23 | 43 |
| 45 | | Permitting | 50 days | Tue 9/26/23 | Mon 12/4/23 | 42 |
| 46 | | ROW Acquisition | 60 days | Tue 9/19/23 | Mon 12/11/23 | 41 |
| 47 | | Utility Window | 30 days | Tue 12/12/23 | Mon 1/22/24 | 46 |
| 48 | | **Construction** | **109 days** | **Mon 2/5/24** | **Thu 7/4/24** | |
| 49 | | Demo | 8 days | Mon 2/5/24 | Wed 2/14/24 | 28 |
| 50 | | **Bridge Construction** | **91 days** | **Thu 2/15/24** | **Thu 6/20/24** | |
| 51 | | Drilled Shafts | 26 days | Thu 2/15/24 | Thu 3/21/24 | 49 |
| 52 | | Substructure | 40 days | Fri 3/22/24 | Thu 5/16/24 | 51 |
| 53 | | Superstructure | 25 days | Fri 5/17/24 | Thu 6/20/24 | 52 |
| 54 | | Roadway Construction | 20 days | Fri 6/7/24 | Thu 7/4/24 | 53SS+15 days |
| 55 | | **BRIDGE OPEN** | 0 days | Thu 7/4/24 | Thu 7/4/24 | 54 |
| 56 | | | | | | |
| 57 | | **S-53 over Little Rocky Creek** | **348 days** | **Tue 9/19/23** | **Thu 1/16/25** | |
| 58 | | **Design** | **185 days** | **Tue 9/19/23** | **Mon 6/3/24** | |
| 59 | | **Road and Hydro** | **60 days** | **Tue 9/19/23** | **Mon 12/11/23** | |
| 60 | | Design and Plan Production | 45 days | Tue 9/19/23 | Mon 11/20/23 | 41 |
| 61 | | Traffic Control Plan | 5 days | Tue 11/21/23 | Mon 11/27/23 | 60 |
| 62 | | Hydraulic Design, Modeling, and Reports | 60 days | Tue 9/19/23 | Mon 12/11/23 | 41 |
| 63 | | Geotech | 70 days | Tue 9/19/23 | Mon 12/25/23 | 41 |
| 64 | | Internal QC | 10 days | Tue 12/26/23 | Mon 1/8/24 | 60,61,62,63 |
| 65 | | Final Const. Submittal | 0 days | Mon 1/8/24 | Mon 1/8/24 | 64 |
| 66 | | SCDOT Review | 15 days | Tue 1/9/24 | Mon 1/29/24 | 65 |
| 67 | | Respond and Revise Plans | 5 days | Tue 1/30/24 | Mon 2/5/24 | 66 |
| 68 | | SCDOT Review | 5 days | Tue 2/6/24 | Mon 2/12/24 | 67 |
| 69 | | Submit RFC Plans | 0 days | Mon 2/12/24 | Mon 2/12/24 | 68 |
| 70 | | Permitting | 50 days | Tue 2/6/24 | Mon 4/15/24 | 67 |
| 71 | | ROW Acquisition | 60 days | Tue 1/30/24 | Mon 4/22/24 | 66 |

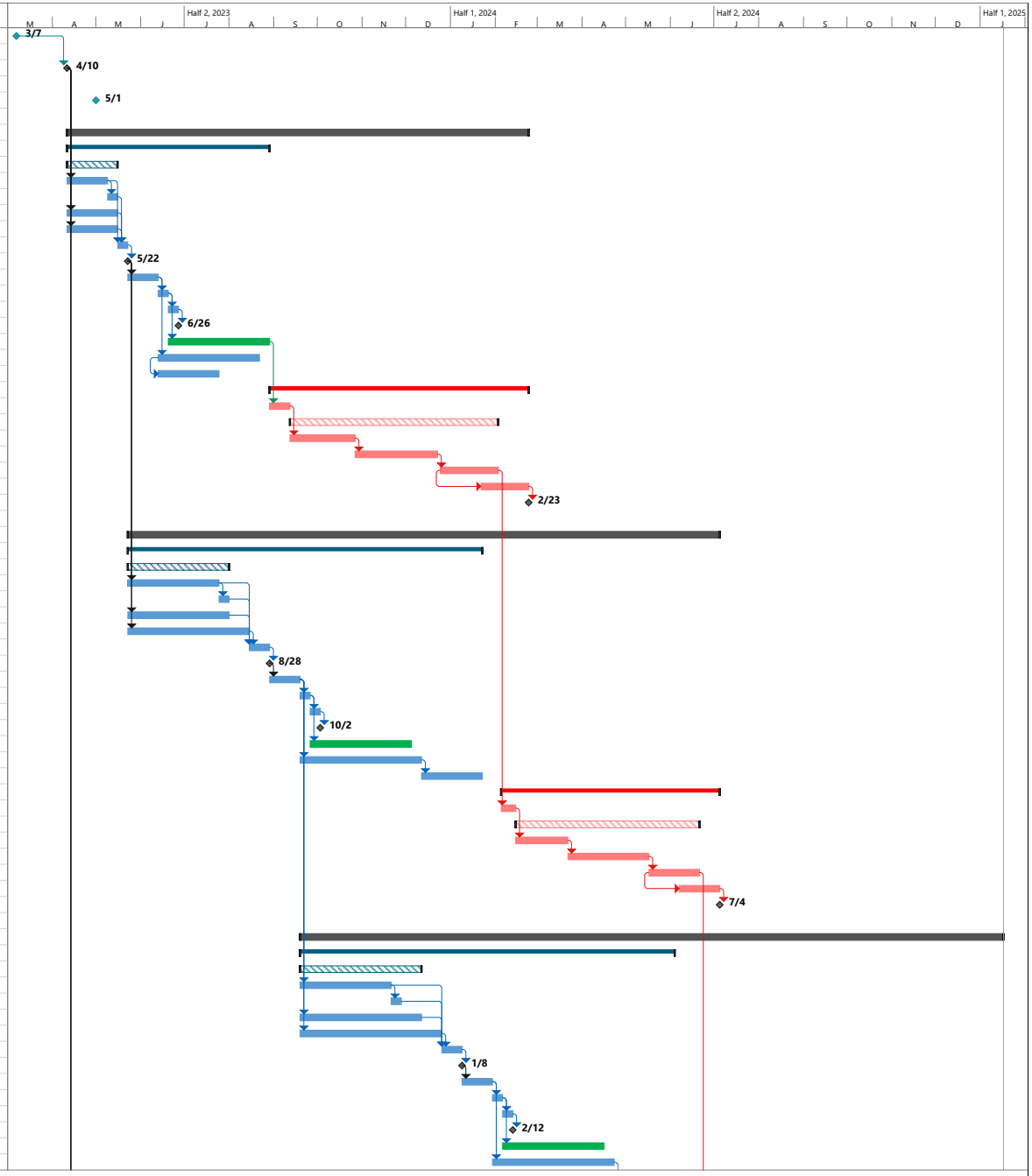


Project: Schedule
Date: Sun 1/29/23

Task | Split | Milestone | Summary | Project Summary | Inactive Task | Inactive Milestone | Inactive Summary | Manual Task | Duration-only | Manual Summary Rollup | Manual Summary | Start-only | Finish-only | External Tasks | External Milestone | Deadline | Progress | Manual Progress

| ID | Task Mode | Task Name | Duration | Start | Finish | Predecessors |
|---|---|---|---|---|---|---|
| 72 | | Utility Window | 30 days | Tue 4/23/24 | Mon 6/3/24 | 71 |
| 73 | | **Construction** | **150 days** | **Fri 6/21/24** | **Thu 1/16/25** | |
| 74 | | Demo | 15 days | Fri 6/21/24 | Thu 7/11/24 | 53 |
| 75 | | **Bridge Construction** | **125 days** | **Fri 7/12/24** | **Thu 1/2/25** | |
| 76 | | Drilled Shafts | 50 days | Fri 7/12/24 | Thu 9/19/24 | 74 |
| 77 | | Substructure | 40 days | Fri 9/20/24 | Thu 11/14/24 | 76 |
| 78 | | Superstructure | 35 days | Fri 11/15/24 | Thu 1/2/25 | 77 |
| 79 | | Roadway Construction | 20 days | Fri 12/20/24 | Thu 1/16/25 | 78SS+25 days |
| 80 | | **BRIDGE OPEN** | 0 days | Thu 1/16/25 | Thu 1/16/25 | 79 |
| 81 | | | | | | |
| 82 | | **S-765 over Hanging Rock Creek** | **404 days** | **Tue 4/11/23** | **Fri 10/25/24** | |
| 83 | | **Design** | **275 days** | **Tue 4/11/23** | **Mon 4/29/24** | |
| 84 | | **Right-of-Way Plans** | **205 days** | **Tue 4/11/23** | **Mon 1/22/24** | |
| 85 | | **Road and Hydro** | **100 days** | **Tue 4/11/23** | **Mon 8/28/23** | |
| 86 | | Design and Plan Production | 50 days | Tue 4/11/23 | Mon 6/19/23 | 3 |
| 87 | | Hydraulic Design, Modeling, and Reports | 100 days | Tue 4/11/23 | Mon 8/28/23 | 3 |
| 88 | | Geotech | 100 days | Tue 4/11/23 | Mon 8/28/23 | 3 |
| 89 | | Internal QC | 10 days | Tue 8/29/23 | Mon 9/11/23 | 86,87,88 |
| 90 | | Prelim ROW Submittal | 0 days | Mon 9/11/23 | Mon 9/11/23 | 89 |
| 91 | | SCDOT Review | 15 days | Tue 9/12/23 | Mon 10/2/23 | 90 |
| 92 | | Respond and Revise Plans | 5 days | Tue 10/3/23 | Mon 10/9/23 | 91 |
| 93 | | SCDOT Review | 5 days | Tue 10/10/23 | Mon 10/16/23 | 92 |
| 94 | | Submit Final ROW Plans | 0 days | Mon 10/16/23 | Mon 10/16/23 | 93 |
| 95 | | ROW Acquisition | 60 days | Tue 10/31/23 | Mon 1/22/24 | 94FS+10 days |
| 96 | | **Construction Plans** | **140 days** | **Tue 10/17/23** | **Mon 4/29/24** | |
| 97 | | **Road and Hydro** | **60 days** | **Tue 10/17/23** | **Mon 1/8/24** | |
| 98 | | Design and Plan Production | 45 days | Tue 10/17/23 | Mon 12/18/23 | 94 |
| 99 | | Traffic Control Plan | 5 days | Tue 12/19/23 | Mon 12/25/23 | 98 |
| 100 | | Hydraulic Design, Modeling, and Reports | 60 days | Tue 10/17/23 | Mon 1/8/24 | 94 |
| 101 | | Geotech | 30 days | Tue 10/17/23 | Mon 11/27/23 | 94 |
| 102 | | Internal QC | 10 days | Tue 1/9/24 | Mon 1/22/24 | 98,99,100,101 |
| 103 | | Final Const. Submittal | 0 days | Mon 1/22/24 | Mon 1/22/24 | 102 |
| 104 | | SCDOT Review | 15 days | Tue 1/23/24 | Mon 2/12/24 | 103 |
| 105 | | Respond and Revise Plans | 5 days | Tue 2/13/24 | Mon 2/19/24 | 104 |
| 106 | | SCDOT Review | 5 days | Tue 2/20/24 | Mon 2/26/24 | 105 |
| 107 | | Submit RFC Plans | 0 days | Mon 2/26/24 | Mon 2/26/24 | 106 |
| 108 | | Permitting | 50 days | Tue 2/20/24 | Mon 4/29/24 | 105 |
| 109 | | Utility Window | 30 days | Tue 2/20/24 | Mon 4/1/24 | 108SS |
| 110 | | **Construction** | **129 days** | **Tue 4/30/24** | **Fri 10/25/24** | |
| 111 | | Demo | 15 days | Tue 4/30/24 | Mon 5/20/24 | 108 |
| 112 | | **Bridge Construction** | **94 days** | **Tue 5/21/24** | **Fri 9/27/24** | |
| 113 | | Drilled Shafts | 25 days | Tue 5/21/24 | Mon 6/24/24 | 111 |
| 114 | | Substructure | 37 days | Tue 6/25/24 | Wed 8/14/24 | 113 |
| 115 | | Superstructure | 32 days | Thu 8/15/24 | Fri 9/27/24 | 114 |
| 116 | | Roadway Construction | 30 days | Mon 9/16/24 | Fri 10/25/24 | 115SS+22 days |
| 117 | | **BRIDGE OPEN** | 0 days | Fri 10/25/24 | Fri 10/25/24 | 116 |

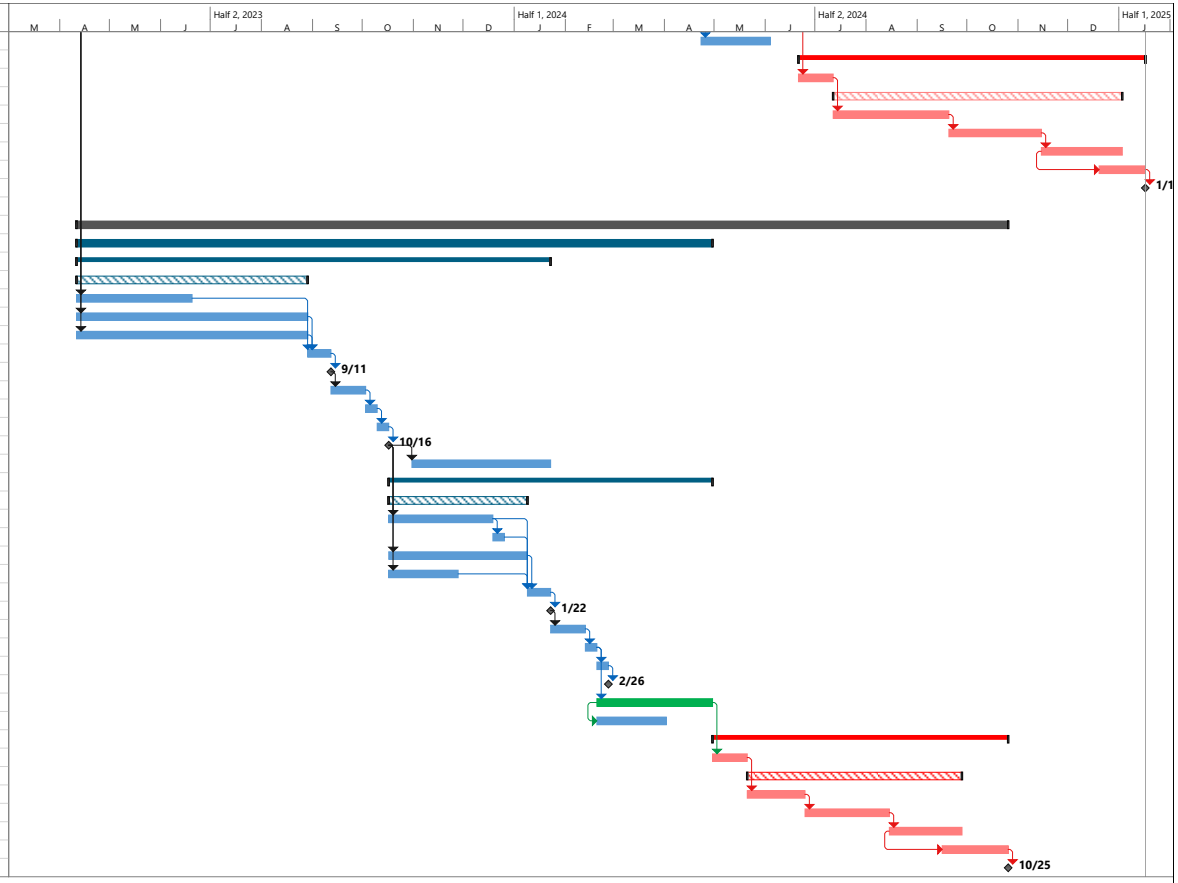


Project: Schedule
Date: Sun 1/29/23

Task | Split | Milestone | Summary | Project Summary | Inactive Task | Inactive Milestone | Inactive Summary | Manual Task | Duration-only | Manual Summary Rollup | Manual Summary | Start-only | Finish-only | External Tasks | External Milestone | Deadline | Progress | Manual Progress

# APPENDIX B

## REQUIRED FORMS AND CONFIDENTIAL & PROPRIETARY INFORMATION PAGE LIST

## 12. STIPEND ACKNOWLEDGEMENT FORM

# Stipend Acknowledgement Form

# Bridge Package 15
# Anderson, Chester, Chesterfield, and Lancaster County

Proposer: E.S. Wagner Co. LLC

ADDRESS: 1515 Shopton Rd, Ste 103 Charlotte NC 28217

The undersigned Proposer, hereby:

☐ Waives the stipend for this Project.

☑ Accepts the stipend for this Project.

By accepting the stipend for this Project, Proposer agrees:

1) to execute and include the Stipend Agreement in Article XIII of the RFP with its RFP response;

2) to submit an invoice with FEIN number for the stipend amount to the SCDOT POC after SCDOT's posting of the Notice of Award on SCDOT's Design-Build Website.;

3) to transfer all rights to its Work Product used to develop the Proposal as of the date of this acknowledgement. "Work Product" " means all submittals, including ATCs, ideas, innovations, solutions, methods, processes, design concepts, materials, electronic files, marked up drawings, cross sections, quantity lists and intellectual property, made by Proposer during the RFP process, including the Proposal, exchange of information during the pre-Proposal and post-Proposal period.

SCDOT will pay the stipend to each eligible unsuccessful Proposer, who has signed a Stipend Agreement, within ninety (90) days after execution of the Contract or the decision to not award a contract.

1-25-2023
Date

E.S. Wagner Co. LLC
Proposer

Tom Watson
Print Name

## 13. STIPEND AGREEMENT

**STIPEND AGREEMENT**
**Project ID: 8862230**
**Bridge Package 15**
**Anderson, Chester, Chesterfield, and Lancaster County**

**THIS STIPEND AGREEMENT** (the "Agreement") is made and entered into as of the ___ day of _____, 20_, by and between the SOUTH CAROLINA DEPARTMENT OF TRANSPORTATION (hereinafter "SCDOT"), and ____E.S. Wagner Co. LLC_____ ("Proposer"), with reference to the following facts:

SCDOT issued a Request for Proposal ("RFP") for design and construction of the above-referenced Design-Build Project ("Project"), pursuant to procurement authority granted in Section 57-5-1625 of the S.C. Code of Laws, 1976, as amended. The RFP provided for payment of stipends as provided herein. Capitalized terms used, but not defined, have the meanings ascribed in the RFP.

**NOW, THEREFORE,** Proposer hereby agrees as follows:

**1. Work Product.**

**1.1** Proposer shall prepare and submit a responsible and responsive Technical Proposal and Cost Proposal that conforms in all material respects to the requirements and provisions of the RFP, as determined by SCDOT, and are timely received by SCDOT in accordance with the RFP Milestone Schedule.

**1.2** By signing this Stipend Agreement, Proposer agrees to transfer full and complete ownership to SCDOT of all Work Product. The Work Product (as defined below) shall become the property of SCDOT without restriction or limitation on its use, without further compensation or consideration, and can be used in connection with this Project or any future projects by SCDOT. Neither Proposer nor any of its team members shall copyright any of the material developed under this Agreement.

**1.3** The term "Work Product" shall mean the Proposal and all material, electronic files, marked up drawings, cross sections, quantity lists, submittals, alternative technical concepts (ATC), ideas, innovations, solutions, methods, processes, design concepts, Trade Secrets or confidential information, and intellectual property, made by or produced for Proposer in the development and submission of the Technical and Cost Proposal, including exchanges of information during the pre-Proposal and post-Proposal period.

**2. Compensation and Payment.**

**2.1** A stipend to Proposer for the Work Product described herein shall be $30,000.00 and is payable to Proposer that was determined to be responsible and (1) submitted a responsive Technical Proposal and responsive Cost Proposal to the RFP which is not selected for award of this Project, or (2) was awarded the Contract but the Contract was terminated by SCDOT for convenience after the Submittal of Proposal Due Date (See Final RFP Milestone schedule) but prior to the Notice to Proceed #1. Responsibility of Proposers and responsiveness of the Technical Proposal and Cost Proposal will be determined by SCDOT as a condition of payment.

**2.2** SCDOT will pay the stipend to Proposer as follows, subject (as applicable) to the following conditions:

(a) Proposer has submitted this signed Stipend Agreement, unchanged with its response to the RFP.

(b) After posting of the Notice of Award on SCDOT's Design-Build Website, Proposer has submitted to SCDOT an invoice, with FEIN Number, for the Stipend amount.

(c) After execution of the Contract or the decision not to award a contract, SCDOT will pay the invoice for the stipend amount to the unsuccessful Proposer meeting the criteria of Section 2.1 within 90 calendar days of receipt of the invoice from Proposer.

(d) If the procurement is suspended or cancelled prior to the Proposal Due Date (see FINAL RFP Milestone schedule), no stipend will be paid to Proposer.

(e) After the submittal of Proposals, but prior to award, if the procurement is cancelled, all Proposers that provide a responsive Technical Proposal and Cost Proposal to the final RFP and submitted a signed Stipend Agreement with their RFP shall receive the stipend

(f) In the event of a Best and Final Offer, only one stipend will be paid to each Proposer that executed a Stipend Agreement and met the other criteria and conditions herein.

(g) No stipends will be paid for submitting RFQ responses.

(h) No stipends will be paid to a Proposer who withdraws at any time from this procurement.

**2.3** Acceptance by the Proposer of payment of the stipend amount from SCDOT shall constitute a waiver by Proposer of any and all right, equitable or otherwise, to bring any claim in connection with this procurement, procurement process, award of the Contract, or cancellation of this procurement.

**2.4** The Proposer awarded the contract shall be not eligible to receive a stipend.

**2.5** If Proposer elects to waive payment of the stipend, SCDOT will not use the ideas or information contained in that Proposer's Proposal for this Project. However, the Proposer's Proposal will be subject to the South Carolina Freedom of Information Act.

**3. Indemnities.**

**3.1** Subject to the limitations contained in Section 3.2, Proposer shall indemnify, protect and hold harmless SCDOT and its directors, officers, employees and contractors from, and Proposer shall defend at its own expense, all claims, costs, expenses, liabilities, demands, or suits at law or equity arising, in whole or in part, from the negligence or willful misconduct of Proposer or any of its agents, officers, employees, representatives or subcontractors or breach of any of Proposer's obligations under this Agreement.

**3.2** This indemnity shall not apply with respect to any claims, demands or suits arising from use of the Work Product by SCDOT.

**4. Compliance With Laws.**

**4.1** Proposer shall comply with all federal, state, and local laws, ordinances, rules, and regulations applicable to the work performed or paid for under this Agreement and covenants and agrees that it and its employees shall be bound by the standards of conduct provided in applicable laws, ordinances, rules, and regulations as they relate to work performed under this Agreement. Proposer agrees to incorporate the provisions of this paragraph in any subcontract into which it might enter with reference to the work performed pursuant to this Agreement.

**4.2** The Proposer agrees (a) not to discriminate in any manner against an employee or applicant for employment because of race, color, religion, creed, age, sex, marital status, national origin, ancestry or disability of a qualified individual with a disability; (b) to include a provision similar to that contained in subsection (a) in any subcontract; and (c) to post and to cause subcontractors to post in conspicuous places available to employees and applicants for employment, notices setting forth the substance of this clause.

**5. Assignment.**

Proposer shall not assign this Agreement without SCDOT's prior written consent. Any assignment of this Agreement without such consent shall be null and void.

**6. Miscellaneous.**

**6.1** Proposer and SCDOT agree that Proposer, its team members, and their respective employees are not agents of SCDOT as a result of this Agreement.

**6.2** This Agreement, together with the RFP, as amended from time to time, the provisions of which are incorporated herein by reference, embodies the entire agreement of the parties. There are no promises, terms, conditions, or obligations other than those contained herein or in the RFP, and this Agreement shall supersede all previous communications, representation, or agreements, either oral or written, between the parties hereto.

**6.3** It is understood and agreed by the parties hereto that if any part, term, or provision of this Agreement is by the courts held to be illegal or in conflict with any law of the State of South Carolina, the validity of the remaining portions or provisions shall not be affected, and the rights and obligations of the parties shall be construed and enforced as if the Agreement did not contain the particular part, term, or provisions to be invalid.

**6.4** This Agreement shall be governed by and construed in accordance with the laws of the State of South Carolina.

**IN WITNESS WHEREOF,** the parties have executed this Agreement as of the date first written above.

Witness:

_____

Recommended:

_____
Brad Reynolds
Design-Build Program Manager

Witness: Daniel M. Arbo
Kelly Ramsey

SOUTH CAROLINA DEPARTMENT
OF TRANSPORATION

By: _____
{INSERT NAME}
Design-Build Engineer

Proposer

E.S. Wagner Co. LLC
Name of Proposer

By: Tom Ud

Its: Senior Vice President & General Manager

# 11. EQUAL EMPLOYMENT OPPORTUNITY CERTIFICATION

**(COMPLETE THIS SECTION FOR FEDERAL PROJECTS ONLY)**
**EQUAL EMPLOYMENT OPPORTUNITY PERFORMANCE**

Select the Certification that applies to the PROPOSER:

Certification (1) [X] or Certification (2) [ ]

Select the appropriate responses in the applicable Certification:

Certification (1): Pursuant to 41 C.F.R. §60-1.7(b)(1), Previous Equal Employment Opportunity Performance Certification, as the Prospective Prime Contractor, I HEREBY CERTIFY THAT I:

(a) **(HAVE / HAVE NOT)** developed and filed an Affirmative Action Program pursuant to 41C.F.R. §60-2 and/or 60-4;

(b) **(HAVE / HAVE NOT)** participated in a previous contract or subcontract subject to the equal opportunity clause;

(c) **(HAVE / HAVE NOT)** filed with the Joint Reporting Committee, the Director of Office of Federal Contract Compliance, or the Equal Employment Opportunity Commission, all reports due under the applicable filing requirements,

OR

Certification (2): I, HEREBY CERTIFY that as the Prospective Prime Contractor submitting this Proposal, **(CLAIM / DO NOT CLAIM)** exemption from the submission of the Standard Form 100 (EEO-1) due to the fact that it employs a total of less than fifty (50) employees under C.F.R. §60-1.7, or qualifies for an exempted status under 41 C.F.R. §60-1.5.

I FURTHER CERTIFY that the above Certification will be made part of any Subcontract Agreement, or other agreement involved with this project.

Executed on _____, 20 ___ .

Signed: _____
(Officer/PROPOSER)

Title: Senior Vice President & General Manager

Company: E.S. Wagner Co. LLC

Address: 1515 Shopton Rd, Ste 103 Charlotte NC 28217

Note: The above certification is required by the Equal Employment Opportunity Regulations of the Secretary of Labor (41 CFR 60-1.7(b)(1)), and must be submitted by PROPOSERS only in connection with contracts which are subject to the equal opportunity clause. Contracts that are exempt from the equal opportunity clause are set forth in 41 CFR 60-1.5. (Generally, only contracts of $10,000 or under are exempt.)

Currently, Standard Form 100 (EEO-1) is the only report required by Executive Orders or their implementing regulations.

Proposers, Primary Members, or proposed Subcontractors (any tier) and Consultants who have participated in a previous contract subject to the Executive Orders and have not filed the required reports shall note that 41 CFR 60-1.7(b)(1) prevents the award of contracts and subcontracts unless such contractor submits a report covering the delinquent period or such other period specified by the Federal Highway Administration or by the Director, Office of Federal Contract Compliance, U.S. Department of Labor.

## 10. NON-COLLUSION CERTIFICATION

### NON-COLLUSION CERTIFICATION

### Project ID: 8862230

IN ACCORDANCE WITH THE PROVISIONS OF S.C. CODE ANN. §§ 39-3-10 ET.SEQ., 39-5-10 ET. SEQ., 15 U.S.C. §45; 23 C.F.R. §635.112(F); AND 28 U.S.C. §1746, I HEREBY ACKNOWLEDGE THAT I AM AN OFFICER OF THE PROPOSER FIRM AND, UNDER PENALTY OF PERJURY UNDER THE LAWS OF THE UNITED STATES AND SOUTH CAROLINA, DECLARE, BY MY CERTIFICATION BELOW, THAT THE FOLLOWING IS TRUE AND CORRECT, AND FURTHER, THAT THIS JOINT-VENTURE, FIRM, PARTNERSHIP, ASSOCIATION OR CORPORATION, OR ANY OTHER LEGAL ENTITY HAS NOT, EITHER DIRECTLY OR INDIRECTLY, ENTERED INTO ANY AGREEMENT, PARTICIPATED IN ANY COLLUSION, OR OTHERWISE TAKEN ANY ACTION IN RESTRAINT OF FREE COMPETITIVE BIDDING IN CONNECTION WITH THE SUBMISSION OF A BID PROPOSAL ON THE ABOVE REFERENCED PROJECT.

BY CHECKING THIS BOX ☑, I CERTIFY THAT I HAVE READ, UNDERSTAND, ACCEPT, AND ACKNOWLEDGE ALL OF THE ABOVE STATEMENTS.

Executed on 1/25/2023
(Date)

Signed: _____
(Officer/Proposer)

Senior Vice President & General Manager
(Title)

1515 Shopton Rd, Ste 103
(Address)

Charlotte, NC 28217

South Carolina
Department of Transportation

# NOTICE TO PROPOSERS

**Bridge Package 15**
**Design-Build – Contract ID 8862230**
**Anderson, Chester, Chesterfield, and Lancaster Counties**

January 5, 2023

NOTICE TO PROPOSERS - Enclosed is **Addendum 1** to the Request for Proposals (RFP) for the Bridge Package 15 design-build project. The information provided in this notice and the addendum shall be made part of the contract documents.

The yellow highlights identify the revisions associated with Addendum 1.

This addendum is being issued in order to provide clarification and additional information for the project. The following sections of the RFP contain revisions:

- Request for Proposals Instructions – Revisions to electronic bid language and revisions to the milestone schedule.
- Agreement – Revisions to Contract Payment (SOV)
- Exhibit 4a Roadway Design Criteria – Revision to Superelevation
- Exhibit 4e Hydraulic Design Criteria – Revisions to Bridge Hydraulic Design and Scour
- Attachment B – Added Construction Section with Minimum SOV Items
- Attachment B – Removal of Environmental Compliance Plan Template
- Attachment B – Revised Minimum Span Length for S-108
- Project Information Package – Added Construction Section with Total List of SOV Items
- Project Information Package – Revised Memos and Models for S-108 and S-294.

Post Office Box 191
Columbia, South Carolina 29202-0191

Phone: (803) 737-2314
TTY: (803) 737-3870

AN EQUAL OPPORTUNITY
AFFIRMATIVE ACTION EMPLOYER

South Carolina
Department of Transportation

# NOTICE OF RECEIPT

**Bridge Package 15**
**Design-Build – Contract ID 8862230**
**Anderson, Chester, Chesterfield, and Lancaster Counties**

**Addendum 1**

The information in this addendum shall be made part of the contract documents. PROPOSERS are instructed to incorporate the information into the previously provided RFP documents.

PROPOSERS are required to sign this document and enclose it with their Technical Proposal. Receipt of this signed document by The South Carolina Department of Transportation serves as confirmation that the PROPOSER has received and incorporated this Addendum into the contract documents.

**Confirmation Statement:**

I, the PROPOSER confirm that I have received this addendum package and have incorporated the information provided in the addendum into the contract documents.

Tom Watson

PROPOSER's Signature

1-25-2023

Date

Tom Watson

Printed Name

For: E.S. Wagner Co. LLC

Design-Build Team Name

South Carolina
Department of Transportation

# NOTICE TO PROPOSERS

**Bridge Package 15**
**Design-Build – Contract ID 8862230**
**Anderson, Chester, Chesterfield, and Lancaster Counties**

January 24, 2023

NOTICE TO PROPOSERS - Enclosed is **Addendum 2** to the Request for Proposals (RFP) for the Bridge Package 15 design-build project. The information provided in this notice and the addendum shall be made part of the contract documents.

The yellow highlights identify the revisions associated with Addendum 1. The green highlights identify the revisions associated with Addendum 2.

This addendum is being issued in order to provide clarification and additional information for the project. The following sections of the RFP contain revisions:

- Request for Proposals Instructions – Date for Addendum 2, revising Director of Construction with Office of Alternative Delivery
- Exhibit 4b – Structures Design Criteria – Corrosion Rate

South Carolina
Department of Transportation

# NOTICE OF RECEIPT

**Bridge Package 15**
**Design-Build – Contract ID 8862230**
**Anderson, Chester, Chesterfield, and Lancaster Counties**

**Addendum 2**

The information in this addendum shall be made part of the contract documents. PROPOSERS are instructed to incorporate the information into the previously provided RFP documents.

PROPOSERS are required to sign this document and enclose it with their Technical Proposal. Receipt of this signed document by The South Carolina Department of Transportation serves as confirmation that the PROPOSER has received and incorporated this Addendum into the contract documents.

**Confirmation Statement:**

I, the PROPOSER confirm that I have received this addendum package and have incorporated the information provided in the addendum into the contract documents.

PROPOSER's Signature

1-27-2023
Date

Tom Watson
Printed Name

For: E.S. Wagner Co., LLC - Holt Consulting
Design-Build Team Name

## 3.3 TEAM STRUCTURE AND PROJECT EXECUTION

Tom Watson and Daniel Atkinson both have the authority to make decisions on behalf of their respective companies for this project. This arrangement allows design and construction decisions to made immediately and with full support of both companies. Tom will lead the overall project and will contract with SCDOT while Talley Smith will be the day-to-day contact after award. Daniel will lead the design and permitting, and construction engineering services. John Cummins will lead the construction effort.

**LEGEND**

| Team Member | | Unique Entity ID | Team Member | | Unique Entity ID |
|---|---|---|---|---|---|
| ESW | E.S. Wagner Company, LLC | XL5LZ9NR4PU5 | JB | J. Bragg Consulting, Inc. | ZQZHWJ1TQCN6 |
| HOLT | Holt Consulting Company, LLC | UKMCJFQWB7J3 | THC | THC, Inc. | QX99U8MJN151 |
| ATL | Atlas Technical Consultants, LLC | FB8SXSEEVAP1 | 3OAKS | Three Oaks Engineering, Inc. | X44JEN612J6 |
| CG2 | Carolinas Geotechnical Group, LLC | ETFMGBZ389R5 | WSP | WSP, Inc. | LLWLXEU6T563 |

Key Personnel Team | Design Engineering | Construction Management Team
Direct Report | Line of Communication | Quality Control Team

### 3.3.1 ORGANIZATION CHART, TEAM STRUCTURE, AND TEAM INTEGRATION

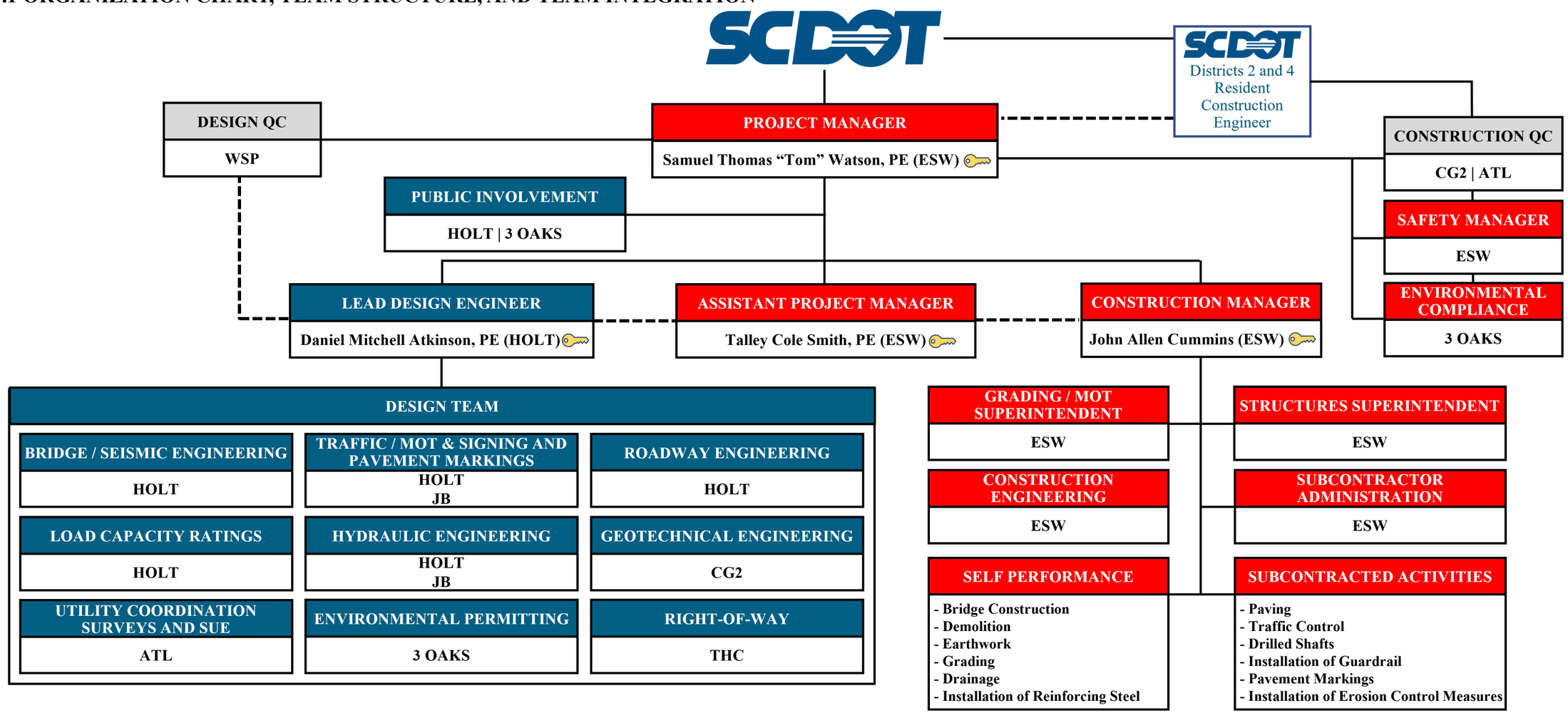

1515 SHOPTON RD. • CHARLOTTE, NC 28217 • (704) 676-9992 • FAX (704) 676-9923 • WWW.ESWAGNER.COM

January 25, 2023

**RE: Confidential or Proprietary Information**
Bridge Package 15 – Design Build Project
Contract ID: 8862230
County: Anderson, Chester, Chesterfield and Lancaster

To whom it may concern,

There are no items in ES Wagner's Proposal for the above referenced project that require confidentiality.

Sincerely,

Tom Watson, PE
(864) 884-0400
twatson@eswagner.com
Senior Vice President & General Manager
E.S. Wagner Co., LLC

1515 SHOPTON RD. • CHARLOTTE, NC 28217 • (704) 676-9992 • FAX (704) 676-9923 • WWW.ESWAGNER.COM

January 24, 2023

**RE: Key Individual Availability**
Bridge Package 15 – Design Build Project
Contract ID: 8862230
County: Anderson, Chester, Chesterfield and Lancaster

To whom it may concern,

The Key Individuals identified as:

Tom Watson, PE, Project Manager
Talley Smith, PE, Assistant Project Manager
John Cummins, Construction Manager

Are available, barring any unforeseen circumstances, at the earliest of the times and durations identified in the RFQ and RFP, until expiration of the Warranty Period, or such earlier date as the Contract is terminated or SCDOT releases, in writing, such Key Individual from this requirement.

Sincerely,

Tom Watson

Tom Watson
(864) 884-0400
twatson@eswagner.com
Senior Vice President & General Manager
E.S. Wagner Co., LLC

SWORN AND SUBSCRIBED before me this
24th day of January, 2023.

My commission expires June 11, 2025

Kelly Remsey
Notary Public

KELLY REMSEY
Notary Public, State of South Carolina
My Commission Expires 6/11/2025

HOLT

**Bridge Package 15**
**Design – Build Project**
**Contract ID 8862230**
**January 27, 2023**

To whom it may concern,

This letter serves as a written statement that Holt Consulting Company's, LLC Key Individual, Daniel Mitchell Atkinson, PE, who is Lead Design Engineer for the above referenced project on the original organizational chart submitted with the SOQ will be available, barring any unforeseen circumstances, at the earliest of contract times and durations identified in the RFQ and RFP, until expiration of the Warranty Period, or such earlier date as the Contract is terminated or SCDOT releases, in writing, such Key Individual from this requirement.

Daniel M. Atkinson

Daniel Mitchell Atkinson, PE
Operations Manager
Holt Consulting Company, LLC

Samuel Thomas "Tom" Watson, PE
Senior Vice President & General Manager
E.S. Wagner Co., LLC

SWORN AND SUBSCRIBED before me
this 27th day of January, 2023

My commission expires June 11, 2025

Kelly Remsey
Notary Public

KELLY REMSEY
Notary Public, State of South Carolina
My Commission Expires 6/11/2025

South Carolina Department of Transportation

Columbia, South Carolina

# SOUTH CAROLINA DEPARTMENT OF TRANSPORTATION

## PRIME CONTRACTOR

## PREQUALIFICATION CERTIFICATE

This Certifies that your company has complied with the rules and regualtions of the Department and the State of South Carolina, and subject to the rules and regulations for a prime contractor, is declared eligible to submit a bid and be awarded any construction contract issued by the Department, subject to obtaining proper bonds and insurance acceptable to the Department and complying with all other statutory and contract requirements.

**All BIDS SUBMITTED TO THE DEPARTMENT MUST BE IN THE NAME AS SHOWN BELOW.**

**E.S. WAGNER COMPANY LLC**

**Vendor ID:** **1TH039**

**Issued :** **June 16, 2022**

**Expires:** **July 31, 2023**

**Approved By:** Maria A. Dennis
**Prequalification Coordinator**

SCDOT FORM CERT-JANUARY 8, 2019

# APPENDIX C

## APPROVED FORMAL ATCS BEING INCORPORATED INTO THE PROPOSER'S COST PROPOSAL

SCDOT South Carolina

# Formal ATCs

Date Received: **1/9/2023** Reponse Sent: **1/10/2023**

| ESW | | | SCDOT | | |
|---|---|---|---|---|---|
| ATC No. | Primary Discipline | Concept | Response | Justification | Final? |
| 1 | Structures | AASHTO BII-36 (39" deep) box beams - max span 105 ft. | Approved | | Yes |
| 2 | Hydrology | S-765 reduce minimum bridge length | Approved | | Yes |

Post Office Box 191
Columbia, South Carolina 29202-0191

Phone: (803) 737-2314
TTY: (803) 737-3870

AN EQUAL OPPORTUNITY
AFFIRMATIVE ACTION EMPLOYER

South Carolina Department of Transportation

# Formal Alternative Technical Concepts Submittal Form

**Project:** Bridge Package 15 **Project ID:** 8862230

**ATC No.:** 1 **Priority:** High **Team:** ES WAGNER-HOLT **Date:** 12/20/22

## Description (required):

This ATC will allow AASHTO BII-36 (39-inch deep) box beams to a maximum span length of 105 feet.

## Usage:

This ATC would be applied to any bridge where a box beam up to 105 feet would be required. Currently, this alternative is being reviewed for S-765 over Hanging Rock Creek but would like to have the option to utilize this length box beam at all bridge sites where deemed applicable.

## Deviations (required):

RFP Bridge Package 15: Exhibit 4b Section 2.1.7
Allowable AASHTO shapes with the following respective maximum span lengths: 100-feet for the 39-inch deep AASHTO BII-36. The requested deviation would allow the AASHTO BII-36 to have a maximum span length of 105-feet.

## Justification:

The use of a longer box beam span will reduce construction cost and schedule. The 105-feet span will be designed to meet all strength, service, load rating, and live load deflection criteria.

## Schedule:

Allowing a longer span for the AASHTO BII-36 will allow the removal or reduction of substructure elements which will reduce the construction schedule. This would reduce the amount of time required to construct those bridges by approximately 45 days.

## Impacts:

No impacts are anticipated.

## History:

We have discussed this type AASHTO Box Beam with local fabricators and 105-feet has been fabricated and constructed.

## Risks:

There are no risks associated with this ATC.

## Costs (required):

The anticipated savings could be as much as $150,000 based on removing an interior bent on drilled shafts

## Quality:

This ATC will provide equal quality to the original RFP.



Post Office Box 191
Columbia, South Carolina 29202-0191

Phone: (803) 737-2314
TTY: (803) 737-3870

AN EQUAL OPPORTUNITY
AFFIRMATIVE ACTION EMPLOYER

# Formal Alternative Technical Concepts Submittal Form

**Project:** Bridge Package 15 **Project ID:** 8862230

**ATC No.:** 1 **Priority:** High **Team:** ES WAGNER-HOLT **Date:** 12/20/22

**Operations & Maintenance:**

No impacts to Operations & Maintenance. The reduction of an interior bent will remove maintenance, overall costs, less structure to inspect and maintain, and remove the potential for debris to pile up at an interior bent location.



Post Office Box 191
Columbia, South Carolina 29202-0191

Phone: (803) 737-2314
TTY: (803) 737-3870

AN EQUAL OPPORTUNITY
AFFIRMATIVE ACTION EMPLOYER

| BRIDGE PLANS ID | SHEET NO. |
|---|---|
| | |

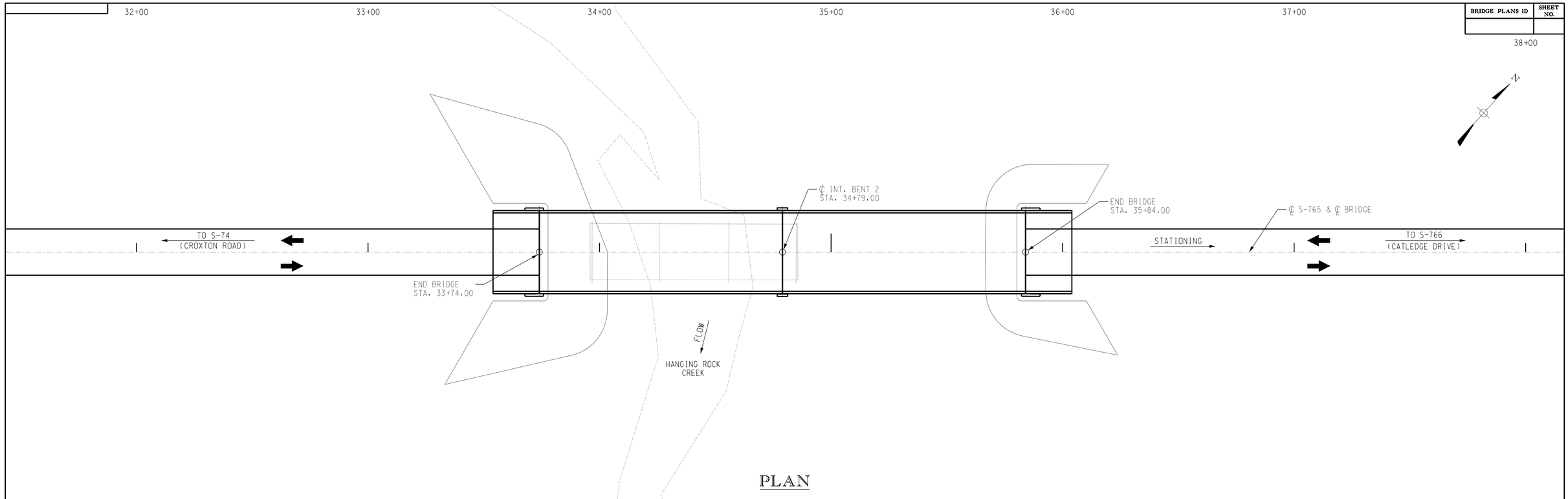


PLAN

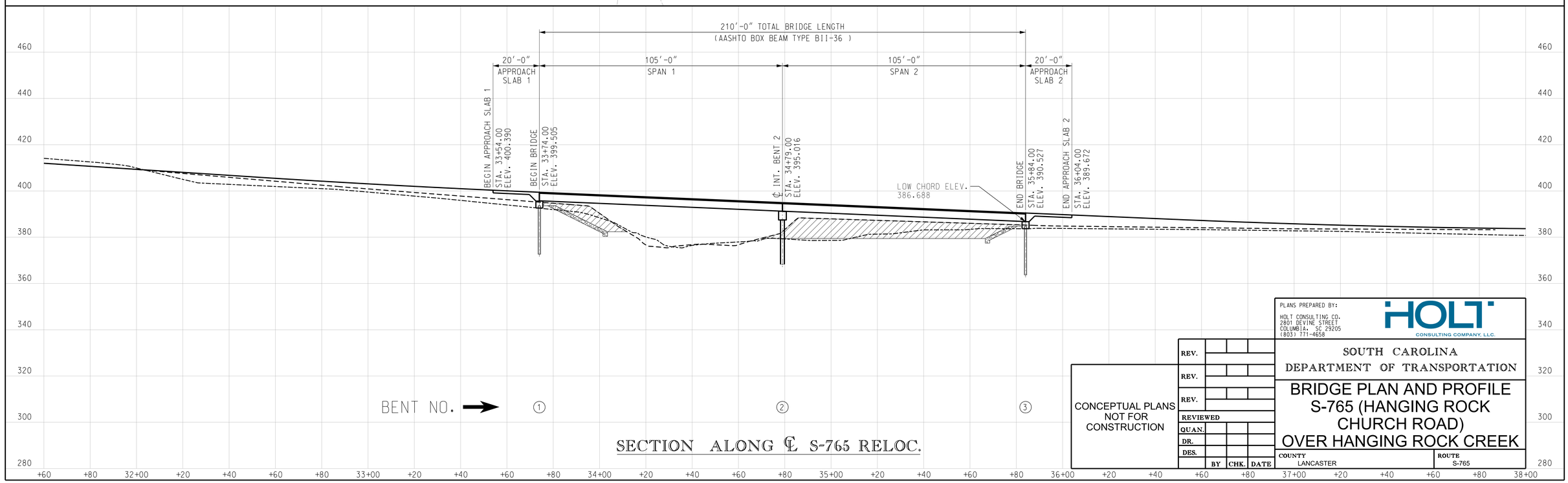


SECTION ALONG ℄ S-765 RELOC.

CONCEPTUAL PLANS NOT FOR CONSTRUCTION

| | | | |
|---|---|---|---|
| REV. | | | |
| REV. | | | |
| REV. | | | |
| REVIEWED | | | |
| QUAN. | | | |
| DR. | | | |
| DES. | | | |
| | BY | CHK. | DATE |

PLANS PREPARED BY:

HOLT CONSULTING CO.
2801 DEVINE STREET
COLUMBIA, SC 29205
(803) 771-4658

HOLT CONSULTING COMPANY, LLC.

SOUTH CAROLINA
DEPARTMENT OF TRANSPORTATION

# BRIDGE PLAN AND PROFILE S-765 (HANGING ROCK CHURCH ROAD) OVER HANGING ROCK CREEK

COUNTY: LANCASTER

ROUTE: S-765

12/19/2022

# Formal Alternative Technical Concepts Submittal Form

South Carolina Department of Transportation

**Project:** BRIDGE PACKAGE 15 **Project ID:** 8862230

**ATC No.:** 2 **Priority:** High **Team:** ES WAGNER - HOLT **Date:** 1/9/23

## Description (required):

The ES Wagner-Holt Team propose to reduce the minimum bridge length at S-765 over Hanging Rock Creek from 210' to 200'. The team will install a new crossline pipe which will act as a "relief structure" and assist in meeting the hydraulic requirements of the project.

See attached roadway and bridge plan and profile.

## Usage:

This ATC is to be used at the S-765 over Hanging Rock Creek Bridge site.

## Deviations (required):

Minimum Bridge length Per Attachment B - Supplemental Project Design Criteria states "The minimum bridge length for S-765 is 210ft."

## Justification:

We will meet the requirements of Exhibit 4e - Hydraulic Design Criteria and reduce the bridge length by 10' by reducing the length of the project and adding a relief culvert of unknown diameter along S-765. Adding the relief culvert helps hydraulically as shown in the image which shows water curving around the existing road. 2D Modeling of the waterway and relief culvert is still underway and a size will be determined post award.

Based on preliminary modeling the 200' bridge will create approximately 0.51' of backwater in the 25-yr. storm and 0.50' of backwater of the 100 yr. while also meeting freeboard requirements. The driveway access located at the end of the bridge will also be relocated to allow for construction of new guardrail meeting new MASH requirements and SCDOT standards. The driveway will be designed to meet the SCDOT ARMS manual and have 4:1 foreslopes which will create a traversable slope for motorists should they venture off the roadway. See attached plans for location of relocated driveway and updated bridge length. Access to the property will be maintained at all times during construction.

All above mentioned items will also meet the requirements of the RFP in regards to backwater and the S-766 bridge site downstream.

## Schedule:

The project schedule could be expedited by 30 days.

## Impacts:

The ATC will have no additional impacts which were not accounted for in the conceptual plans provided. Meets SCDOT's "Supplemental Design Criteria for Low Volume Bridge Replacement Projects".

## History:

Construction of pipes and bridges are standard. The use of two dimensional modeling at this site benefits the project because it enables our team to more accurately model the floodplain and the nearby bridge sites. The new pipe and bridge also meet SCDOT's "Supplemental Design Criteria for Low Volume Bridge Replacement Projects". Driveway access can be relocated for safety purposes and is designed following the ARMS manual.



Post Office Box 191
Columbia, South Carolina 29202-0191

Phone: (803) 737-2314
TTY: (803) 737-3870

AN EQUAL OPPORTUNITY
AFFIRMATIVE ACTION EMPLOYER

# Formal Alternative Technical Concepts Submittal Form

**Project:** BRIDGE PACKAGE 15 **Project ID:** 8862230

**ATC No.:** 2 **Priority:** High **Team:** ES WAGNER - HOLT **Date:** 1/9/23

**Risks:**

There are no risks associated with this ATC.

**Costs (required):**

The anticipated savings would be approximately $30,000 based on reducing bridge length. It would also potentially save 30 workings days.

**Quality:**

There are no impacts to Quality.

**Operations & Maintenance:**

No impacts to Operations & Maintenance. The reduction of an interior bent will remove maintenance, overall costs, less structure to inspect and maintain, and remove the potential for debris to pile up at an interior bent location.



Post Office Box 191
Columbia, South Carolina 29202-0191

Phone: (803) 737-2314
TTY: (803) 737-3870

AN EQUAL OPPORTUNITY
AFFIRMATIVE ACTION EMPLOYER

| BRIDGE PLANS ID | SHEET NO. |
|---|---|
| | |

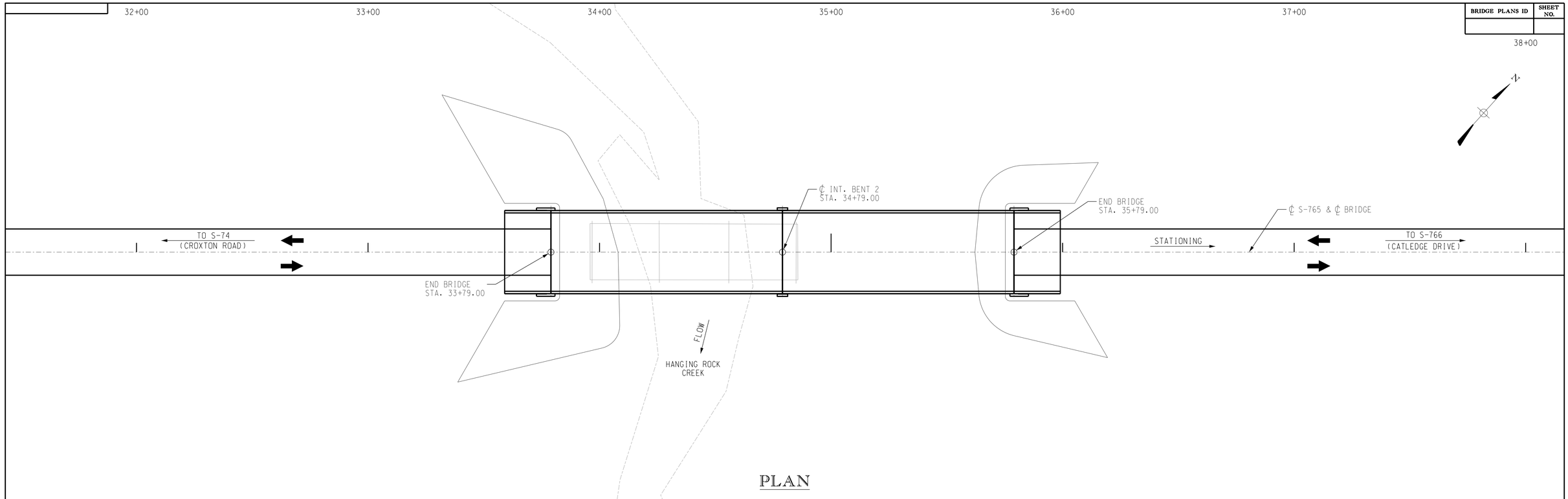


PLAN

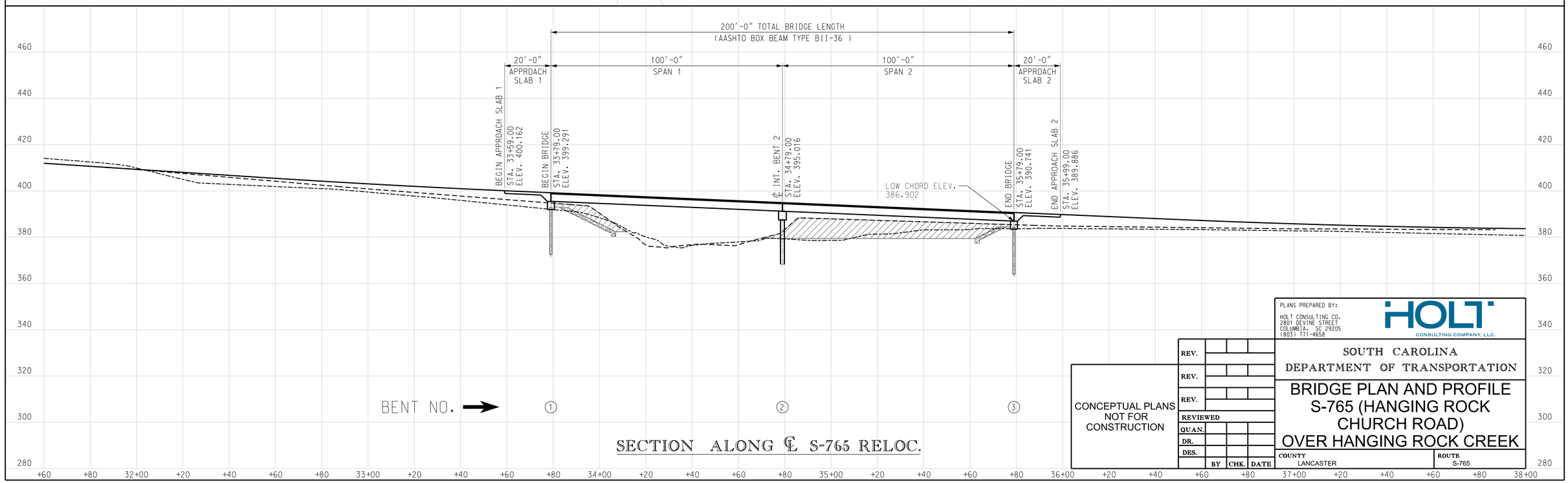


SECTION ALONG ℄ S-765 RELOC.

CONCEPTUAL PLANS NOT FOR CONSTRUCTION

| | | | |
|---|---|---|---|
| REV. | | | |
| REV. | | | |
| REV. | | | |
| REVIEWED | | | |
| QUAN. | | | |
| DR. | | | |
| DES. | | | |
| | BY | CHK. | DATE |


PLANS PREPARED BY:

HOLT CONSULTING CO.
2801 DEVINE STREET
COLUMBIA, SC 29205
(803) 771-4658

HOLT CONSULTING COMPANY, LLC.


SOUTH CAROLINA
DEPARTMENT OF TRANSPORTATION

# BRIDGE PLAN AND PROFILE S-765 (HANGING ROCK CHURCH ROAD) OVER HANGING ROCK CREEK

| COUNTY | ROUTE |
|---|---|
| LANCASTER | S-765 |

12/19/2022

| FED. RD. DIV. NO. | STATE | COUNTY | PROJECT ID | ROUTE NO. | SHEET NO. |
|---|---|---|---|---|---|
| 3 | SC | LANCASTER | 8862230 | S-765 | 3 |

SCDOT
South Carolina Department of Transportation

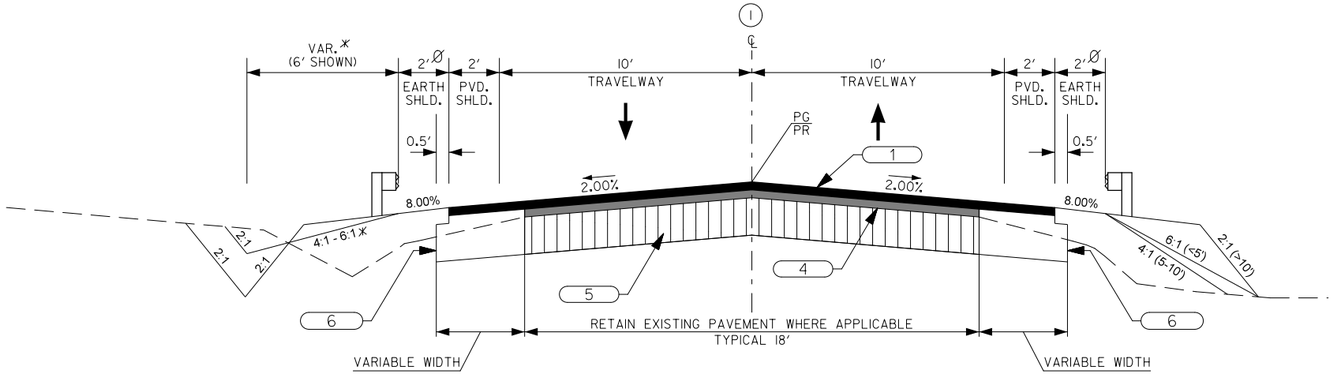


**USE THIS SECTION ON S-765 (HANGING ROCK CHURCH ROAD) OVER HANGING ROCK CREEK**
**STA. 31+90.90 TO APPROX. STA. 32+25**
**APPROX. STA. 37+90 TO STA. 38+85.90**

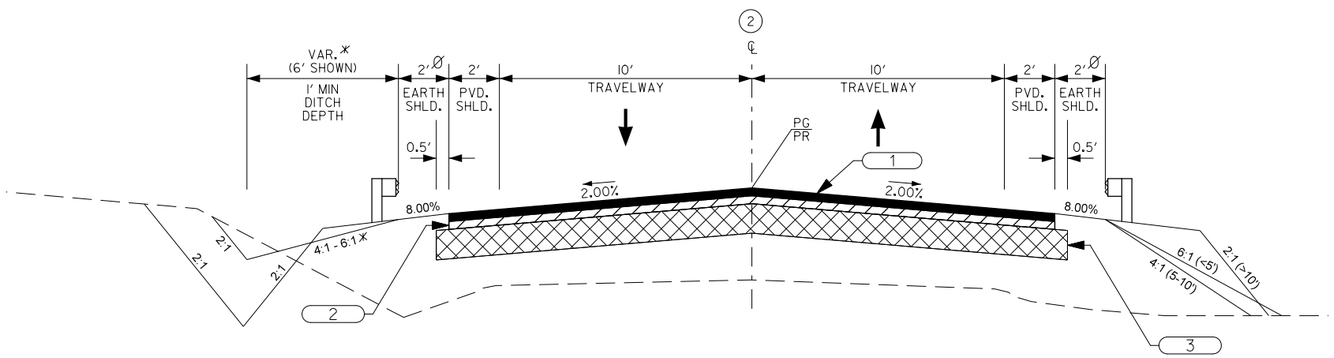


**USE THIS SECTION ON S-765 (HANGING ROCK CHURCH ROAD) OVER HANGING ROCK CREEK**
**APPROX. STA. 32+25 TO APPROX. STA. 37+90**

**EXCEPTION: 200' x 30' BRIDGE**
**FROM STA. 33+79.00 TO STA. 35+79.00**

NOTES:

✳ VARIABLE - THIS SLOPE MAY BE VARIED WHEN A DEEPER DITCH IS NECESSARY FOR DRAINAGE PURPOSES, USING A MINIMUM SLOPE OF 12:1 AND A MAXIMUM SLOPE OF 4:1. WHERE A DEEPER DITCH THAN PROVIDED BY A 4:1 IS NECESSARY, THE DITCH SHALL BE PLACED FARTHER FROM THE C/L CONTINUING THE 4:1 SLOPE TO PROVIDE FOR THE NECESSARY DEPTH.
SEE PROFILE FOR SPECIAL DITCH GRADES.

Ø WHERE CLEARZONE IS UNATTAINABLE OR END TREATMENT IS REQUIRED FOR BRIDGE APPROACH, ADD 3.75' TO SHOULDER FOR GUARDRAIL AND 2:1 FORESLOPE. ADDITIONAL SHOULDER WIDTH REQUIRED FOR END TREATMENT TYPE "TL2".
SEE SCDOT STANDARD DRAWING 805-115-50.

TRANSITION PAVED SHOULDER
LT STA. XXXX TO XXXX
LT STA. XXXX TO XXXX
RT STA. XXXX TO XXXX
RT STA. XXXX TO XXXX
SEE PLANS AND CROSS SECTIONS FOR DETAILS.

## LEGEND
## (PAVEMENT DESIGN)

| | |
|---|---|
| 1 | HOT MIX ASPHALT SURFACE COURSE TYPE C (150 LBS/SY) |
| 2 | HOT MIX ASPHALT INTERMEDIATE COURSE TYPE C (175 LBS/SY) |
| 3 | HOT MIX ASPHALT BASE COURSE TYPE B (450 LBS/SY) |
| 4 | VARIABLE DEPTH HOT MIX ASPHALT SURFACE COURSE TYPE E < 1.5"<br>VARIABLE DEPTH HOT MIX ASPHALT INTERMEDIATE COURSE TYPE C > 1.5" |
| 5 | RETAIN EXISTING PAVEMENT |
| 6 | SHOULDER WIDENING MATERIAL (400 LBS/SY) |

FUNCTIONAL CLASS

RURAL LOCAL GROUP 4

| | DESIGN SPEED | | |
|---|---|---|---|
| ROUTE | MPH | FROM STA. | TO STA. |
| S-765 | 40 | 31+50.00 | 39+10.55 |
| | | | |
| | | | |
| | EXCEPTIONS TO DESIGN SPEED | | |
| | | | |
| | | | |
| | | | |

PAVEMENT DESIGN

APPROVED BY

DATE

E.S. WAGNER CO. 75 Year Anniversary 1947-2022

HOLT CONSULTING COMPANY, LLC.

| REV. NO. | BY | DATE | DESCRIPTION OF REVISION |
|---|---|---|---|
| 4 | | | |
| 3 | | | |
| 2 | | | |
| 1 | | | |

DESIGNED BY: _____ DATE _____
DRAWN BY: _____ DATE _____
CHECKED BY: _____ DATE _____

SOUTH CAROLINA
DEPARTMENT OF TRANSPORTATION

TYPICAL SECTION
S-765 (HANGING ROCK CHURCH ROAD)
OVER HANGING ROCK CREEK

SHEET 3 | SCALE: N.T.S.

| FED. RD. DIV. NO. | STATE | COUNTY | PROJECT ID | ROUTE NO. | SHEET NO. |
|---|---|---|---|---|---|
| 3 | SC | LANCASTER | 8862230 | S-765 | 6 |

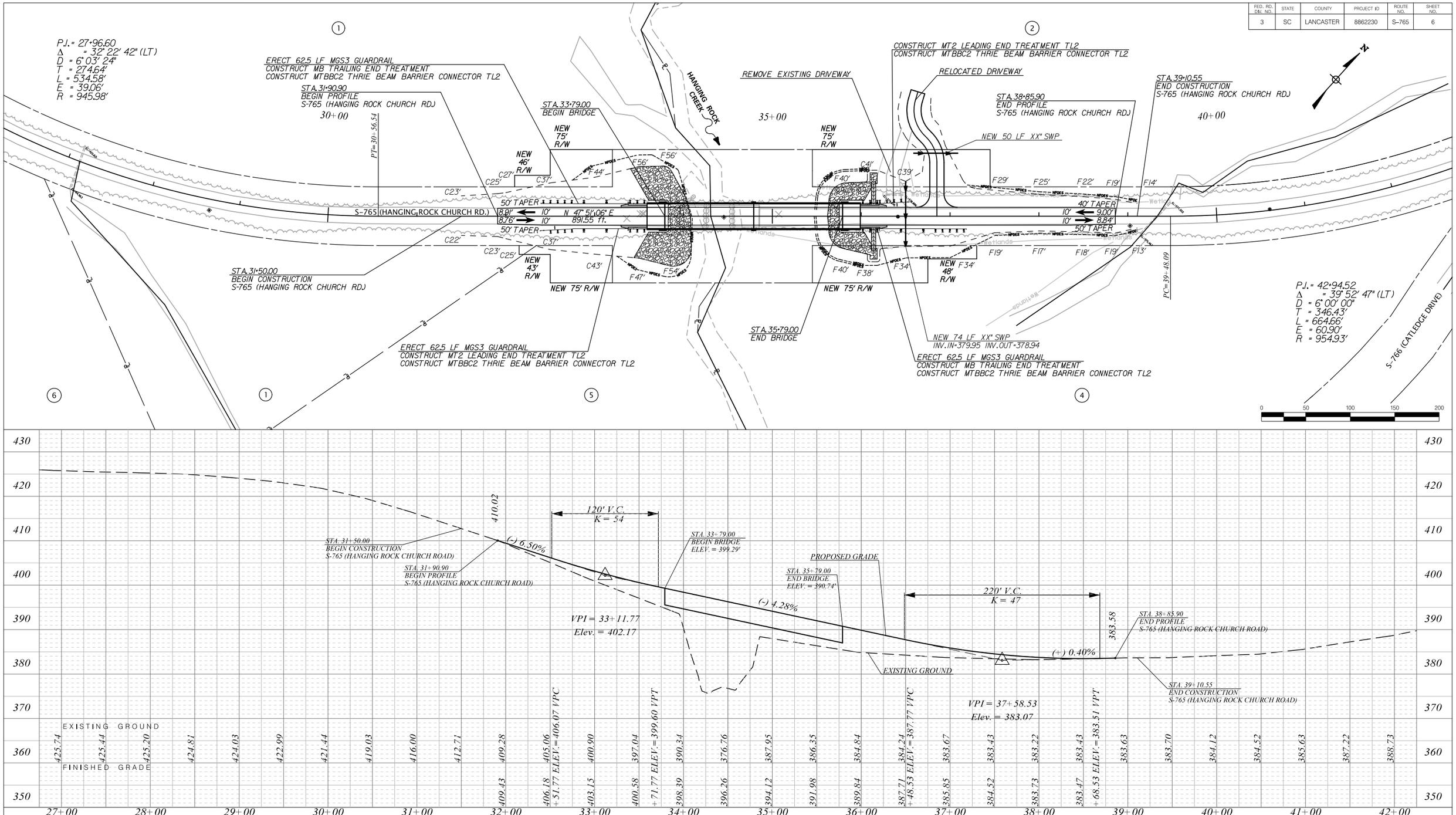


E.S. WAGNER CO. 75 Year Anniversary 1947-2022

HOLT CONSULTING COMPANY, LLC.

NOT FOR CONSTRUCTION

| REV. NO. | BY | DATE | DESCRIPTION OF REVISION |
|---|---|---|---|
| 4 | | | |
| 3 | | | |
| 2 | | | |
| 1 | | | |

DESIGNED BY: _____ DATE _____
DRAWN BY: _____ DATE _____
CHECKED BY: _____ DATE _____

SOUTH CAROLINA
DEPARTMENT OF TRANSPORTATION

PLAN AND PROFILE SHEET
S-765 (HANGING ROCK CHURCH ROAD)
OVER HANGING ROCK CREEK

SHEET 6 | SCALE: 1" = 50'

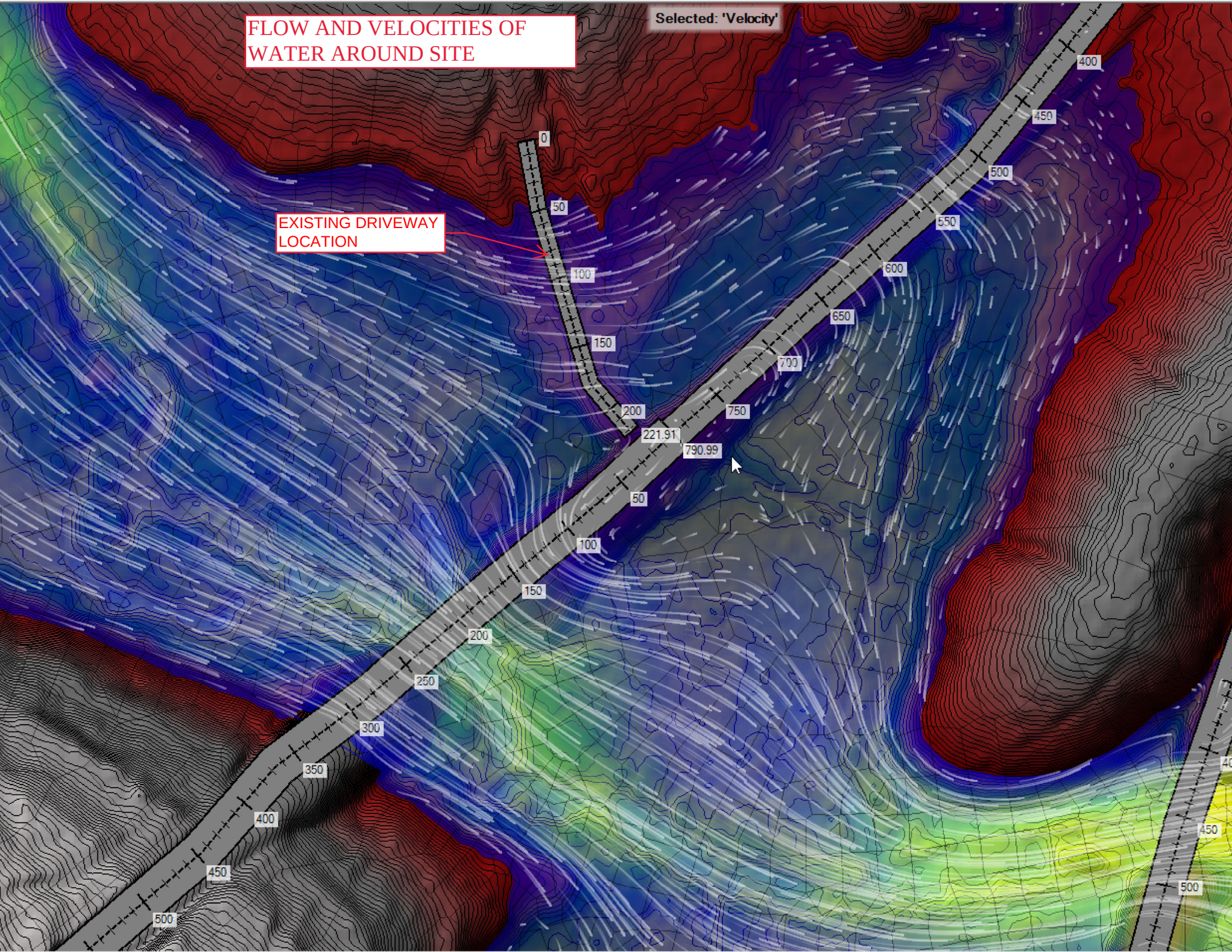
FLOW AND VELOCITIES OF WATER AROUND SITE
Selected: 'Velocity'
EXISTING DRIVEWAY LOCATION
0
50
100
150
200
221.91
790.99
750
700
650
600
550
500
450
400
50
100
150
200
250
300
350
400
450
500
450
500